Gallagher

Gallagher- Wiegand Protocol Converter

Installation Note

Gallagher- Wiegand Protocol Converter: C200663

ATTENTION: This equipment contains components that can be damaged by electrostatic discharge. Ensure both you and the equipment are earthed before beginning any servicing.



Copyright © Gallagher Group Limited

Disclaimer

This document gives certain information about products and/or services provided by Gallagher Group Limited or its related companies (referred to as "Gallagher Group").

The information is indicative only and is subject to change without notice meaning it may be out of date at any given time. Although every commercially reasonable effort has been taken to ensure the quality and accuracy of the information, Gallagher Group makes no representation as to its accuracy or completeness and it should not be relied on as such. To the extent permitted by law, all express or implied, or other representations or warranties in relation to the information are expressly excluded.

Neither Gallagher Group nor any of its directors, employees or other representatives shall be responsible for any loss that you may incur, either directly or indirectly, arising from any use or decisions based on the information provided.

Except where stated otherwise, the information is subject to copyright owned by Gallagher Group and you may not sell it without permission. Gallagher Group is the owner of all trademarks reproduced in this information. All trademarks which are not the property of Gallagher Group, are acknowledged.

Copyright © Gallagher Group Ltd 2021. All rights reserved.

Contents

1 Introduction 4
2 Before you begin 4
3 Installation 5
4 Component Layout 6
5 Wiegand Output Format 7
6 Wiring 8
7 Technical specifications 10
Appendix A: Unit dimensions 11

Copyright © Gallagher Group Limited

1 Introduction

The Gallagher - Wiegand Protocol Converter translates card data received from a Cardax IV Reader into Wiegand data for a third party device.



2 Before you begin

2.1 Shipment contents

Check the shipment contains the following items:

- 1 x Gallagher - Wiegand Protocol Converter
- 1 x Gallagher - Wiegand Protocol Converter Installation Note (3E1932)

2.1 Firmware

Version vGC1.09 (or later) of the Wiegand Protocol Converter firmware code supports the Wiegand output protocol.

New in vGC1.09: This firmware version now supports HID 96 cards in Mode 2.

2.3 Power supply

We recommend that power be supplied from the third-party device. However, a separate power supply can be used. Ensure both devices have a common ground for signal integrity, (i.e. a link between GND (on the Protocol Converter) and 0 V (on the third party device).

The Wiegand Protocol Converter requires a 13.6 Vdc (± 15%) power supply. This is connected through the terminals labelled VIN and GND.

The power supply cable must be of sufficient size to ensure that the voltage at the unit terminals is the recommended 13.6 Vdc (± 15%).

Copyright © Gallagher Group Limited

3 Installation

1. Mount the Wiegand Protocol Converter and the Cardax IV Reader.
2. Install the cabling from the Wiegand Protocol Converter to each of the devices.
3. Connect the Cardax IV Reader to the Wiegand Protocol Converter.

Top Row

WHITE	=	White wire of Cardax IV Reader
LOOP	=	Connect this into Bottom Row Loop
DATA 1	=	DATA 1 line of third-party device
VOUT	=	Red wire of Cardax IV Reader
GND	=	Black wire of Cardax IV Reader
VIN	=	Power In +ve
GND	=	Power In Ground

Bottom Row

LOOP	=	Connect this into Top Row Loop
DATA 0	=	DATA 0 line of third-party device
BLUE	=	Blue wire of Cardax IV Reader
INPUT 1	=	L1 line of third-party device
INPUT 2	=	BZ line of third-party device

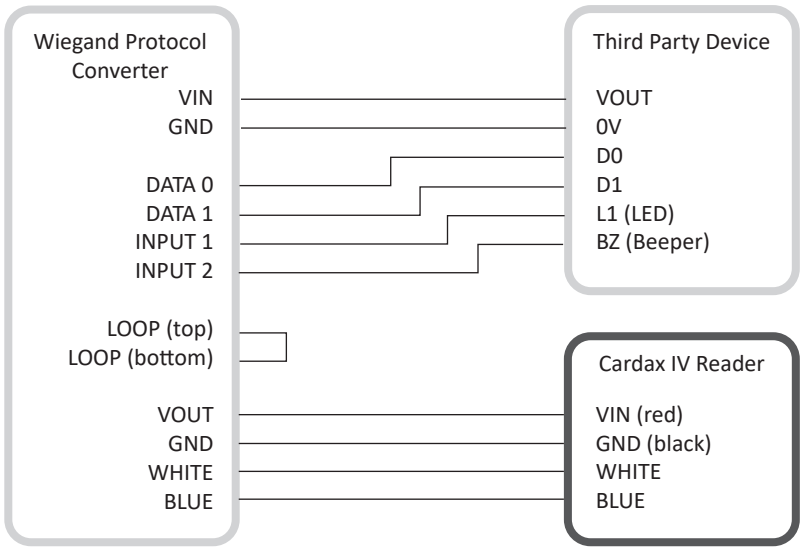

4. Connect the Wiegand Protocol Converter to the third party device.

   Note: Wires used must be a minimum size of 0.2 mm for connecting the Wiegand Protocol Converter to the third party device.

5. Carefully set the Firmware Mode switch on the Wiegand Protocol Converter to the required mode using an appropriate sized screwdriver. Refer to the *"Wiegand Output Format"* section to select the mode required. Refer to the next section *"Component Layout"* for the location of the Firmware Mode switch.

Copyright © Gallagher Group Limited

4 Component layout

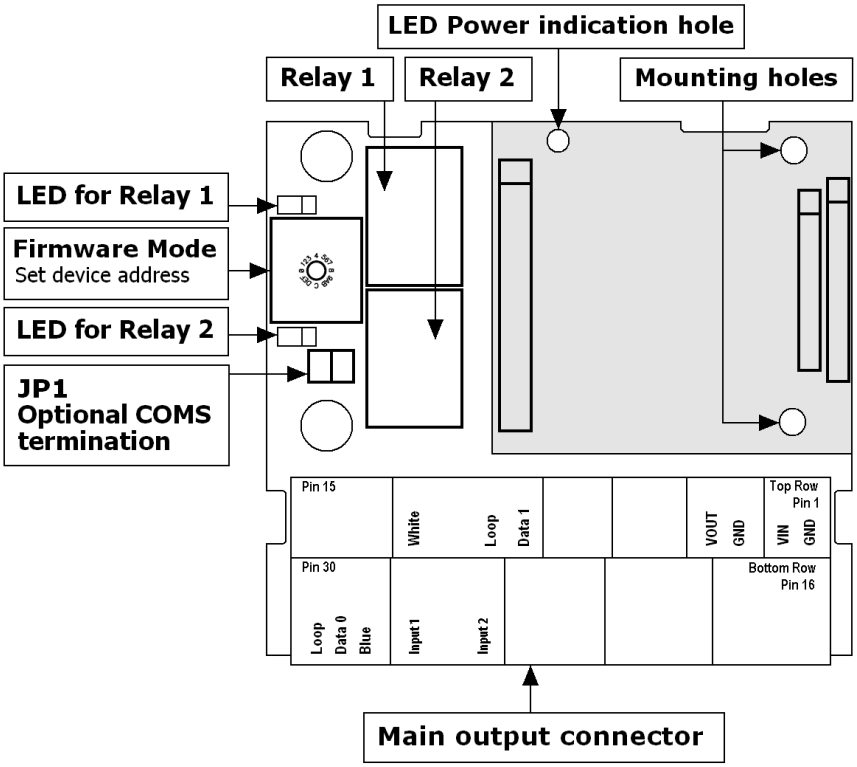

Copyright © Gallagher Group Limited

5 Wiegand output format

The Wiegand Protocol Converter unit converts the card data to Wiegand data using the following format:

Mode 1	Convert Cardax card data to 40 bit Wiegand output: • first 16 bits are the Cardax facility code • next 24 bits are the Cardax card number Other card types are rejected. Any Cardax IV Reader may be used.
Mode 2	HID 48, HID 96, and Cardax card output: • Cardax cards are output in 40 bit format as per mode 1 • HID 48 and HID 96 cards are output in their native Wiegand format (37 bits or less depending on the customer code). HID customer codes of 0, 1, 0x4f, 0x50 and 0x51 are supported. Other cards types are rejected. This mode requires a Cardax IV 125 Reader to be used.
Mode 4	Convert Cardax card data to 48 bit Wiegand output: • first 16 bits are the Cardax facility code • next 24 bits are the Cardax card number • next 8 bits are the Cardax card issue level Other card types are rejected. Any Cardax IV Reader may be used.
Mode 6	Convert Indala card data to 26 bit Wiegand output: • must be an Indala Flex Pass card type • must have card data of 224 bits (28 bytes) • must pass basic Indala Flex Pass card data validation • must have an encoded Wiegand data length of 26 bits • has been developed for one customer (facility code) only Other card types are rejected. This mode requires a Cardax IV T11 Multi Tech Reader to be used. Firmware version vHM3.00.60 or later.

Note: If a T-series Reader connected as Cardax IV to the Wiegand Protocol Converter fails to read Gallagher-encoded card data (Cardax Card data), then connect the Reader via HBUS to a v8.10 or later Command Centre system and upgrade the reader firmware to vHM-3-07-026 or later. Then, connect the Reader back to the Wiegand Protocol Converter.

Alternatively, you can connect the Reader as Cardax IV to any Command Centre system, enable Admin card on that Command Centre Server, and present a facility code Admin card at the Reader to load the Gallagher-encoded card facility code so the Reader will recognise the card. For help with Admin cards, refer to the topic *"Card Security"* in the Gallagher Configuration Client Online help.

Copyright © Gallagher Group Limited

6 Wiring

6.1 Data wiring

The Wiegand data lines are required to be pulled high. If the third party device does not have any internal pull-ups on the data lines, external pull-ups using 1.5 K resistors are required, as shown in the following wiring diagram:

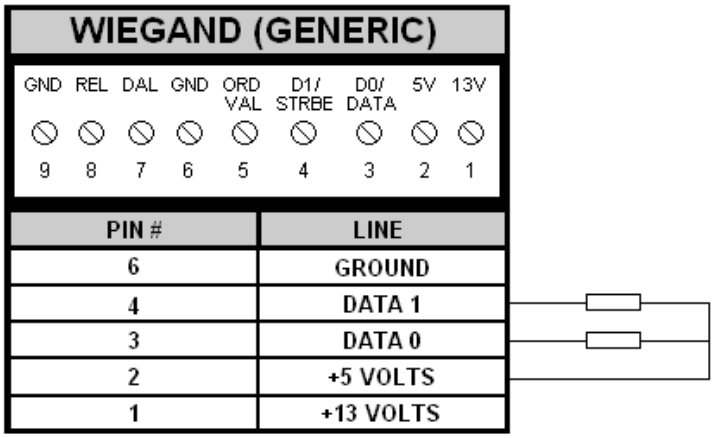

6.2 Input wiring

The Wiegand input lines are connected to and controlled by the third party device, for giving feedback to the success of the cardholder's access attempt. When the input lines are pulled to ground, the Reader's LED will change from red to green and the Reader's buzzer will change from off to on.

Without this wiring, an idle Reader's LED will be red. Presenting cards of the wrong type for the mode selected will cause the reader to play a denied tone and flash the red LED regardless of the state of the inputs.

Some readers, (e.g. Gallagher T-Series) require ongoing communications to prevent them showing an offline status. The Wiegand Protocol Converter automatically does this when the Input lines are left floating in the default state (not pulled to ground). Applying a trigger to Input 1 for longer than 30 seconds will cause a T-Series Reader to indicate unconfigured (three flash).

The following table shows how the input lines affect the Reader:

Input	State	Function
1	H (5 V, default)	LED = Red
1	L (0 V)	LED = Green
2	H (5 V, default)	Buzzer = Off
2	L (0 V)	Buzzer = On

Copyright © Gallagher Group Limited

The following diagram shows the input timings:

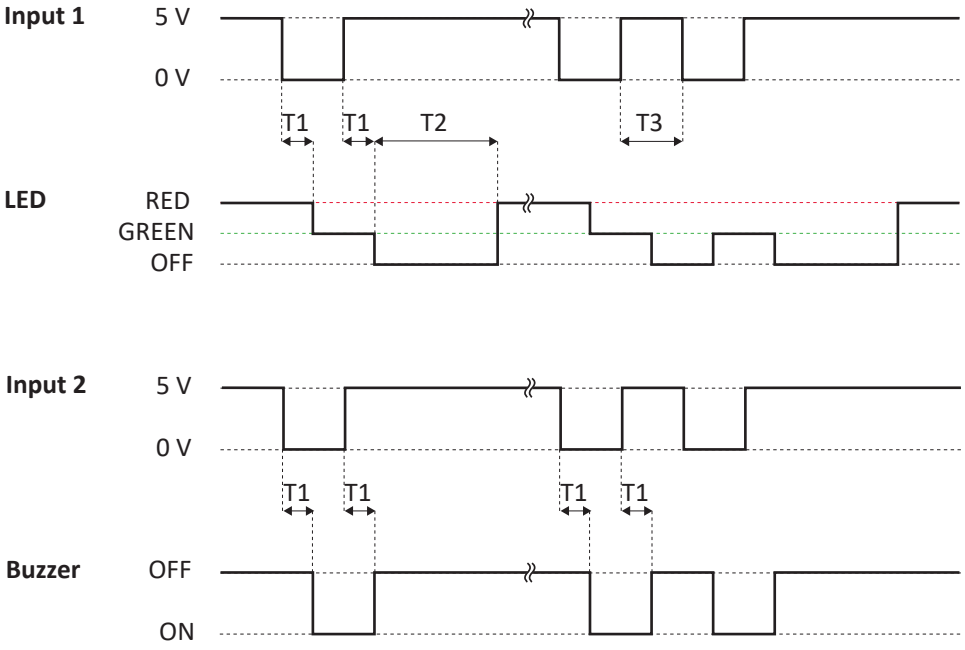

T1 = 40 milliseconds
T2 = 500 milliseconds
T3 = <500 milliseconds

Copyright © Gallagher Group Limited

7 Technical specifications

Routine maintenance:	Not applicable for this unit
Power required:	
Voltage	13.6 ± 15% Vdc
Current	100 mA
Relay contact current rating at 24 Vdc	N/A
Environmental:	
Operating temperature	-10 °C to +55 °C
Humidity	95% non-condensing
Fuses:	
VIN - power in	0.5 A resettable thermal fuse
VOUT - power out	0.5 A resettable thermal fuse
Dimensions:	
Height	30 mm (1.2 in)
Depth	75 mm (3 in) with connectors
Width	98 mm (3.9 in) with mounting tabs

CE EN50130-4
EN55022

ACN 002 132 943

Note: Changes or modifications not expressly approved by Gallagher Limited could void the user's authority to operate this equipment.

Copyright © Gallagher Group Limited

Appendix A: Unit dimensions

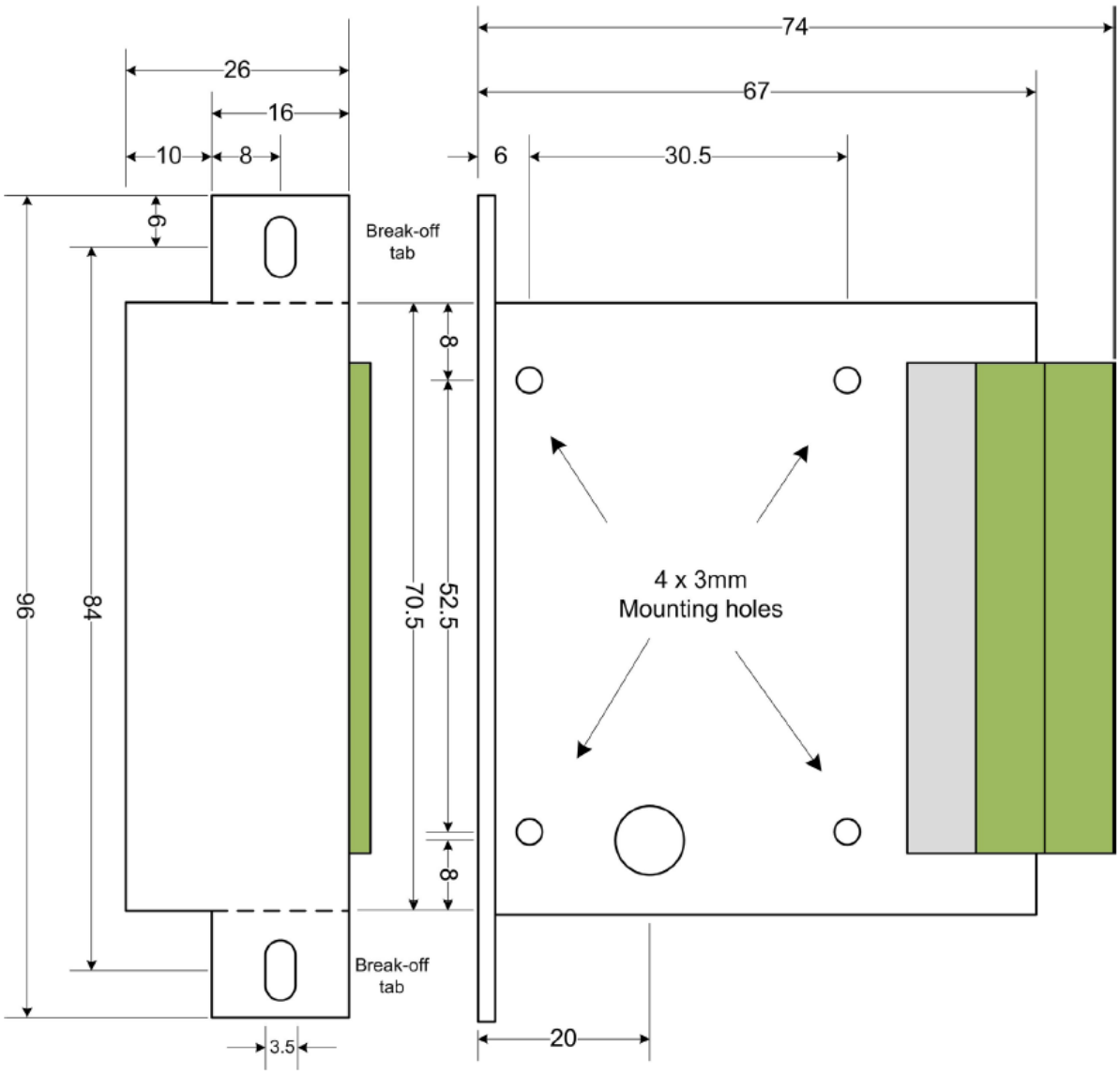

Copyright © Gallagher Group Limited