Gallagher

QuickSwitch ME

Installation Note

QuickSwitch ME02:	C300700
QuickSwitch ME52:	C300701
QuickSwitch ME16IN:	C300706
QuickSwitch ME16OUT:	C300707



Copyright © Gallagher Group Limited

Disclaimer

This document gives certain information about products and/or services provided by Gallagher Group Limited or its related companies (referred to as "Gallagher Group").

The information is indicative only and is subject to change without notice meaning it may be out of date at any given time. Although every commercially reasonable effort has been taken to ensure the quality and accuracy of the information, Gallagher Group makes no representation as to its accuracy or completeness and it should not be relied on as such. To the extent permitted by law, all express or implied, or other representations or warranties in relation to the information are expressly excluded.

Neither Gallagher Group nor any of its directors, employees or other representatives shall be responsible for any loss that you may incur, either directly or indirectly, arising from any use or decisions based on the information provided.

Except where stated otherwise, the information is subject to copyright owned by Gallagher Group and you may not sell it without permission. Gallagher Group is the owner of all trademarks reproduced in this information. All trademarks which are not the property of Gallagher Group, are acknowledged.

Copyright © Gallagher Group Ltd 2025. All rights reserved.

Contents

1 Introduction 3
2 Before you begin 4
2.1 Shipment contents 4
2.2 Software 4
2.3 Power supply 4
2.4 Building Cabling 4
2.5 HBUS cabling topology 5
2.6 Termination 5
2.7 Device Limits 5
2.8 QuickSwitch Cabling Topology 5
3 Installation 6
3.1 Installing QuickSwitch ME02 6
3.2 Installing QuickSwitch ME52, ME16IN or ME16OUT 7
4 Connections 8
4.1 ME02 Connections 8
4.2 ME52 Connections 9
4.3 ME16IN Connections 10
4.4 ME16OUT Connections 11
4.5 Balanced Inputs 12
4.6 Output Relays 12
4.7 Tamper input 12
4.8 Power Fault Input 13
4.9 Battery Fault Input 13
5 Gallagher Controller Mounting 13
6 Hardware Architecture 14
7 HBUS LED Diagnostic Indications 14
8 Accessories 14
9 Technical specifications 15
10 Approvals and Compliance Standards 16
11 Mounting Dimensions 17

1 Introduction

The Gallagher QuickSwitch ME boards provide a complete and cost-effective migration path to Gallagher. Each board replicates the layout and terminal locations of commonly used security hardware, allowing sites to upgrade to Gallagher more efficiently.

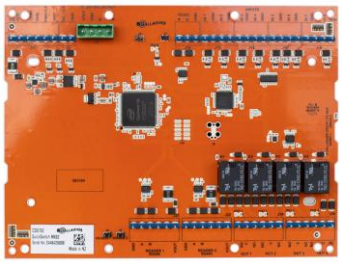

QuickSwitch ME02

The QuickSwitch ME02 board is a nonintelligent door module capable of supporting 2x doors with the use of a Gallagher Controller. Additional HBUS devices can be daisy chained from the ME02 to extend the system to support a maximum of x10 doors per controller.

The board provides connection for:

- 8 Inputs
- 4 Outputs
- 3 RS485 ports (2x for reader ports, 1x upstream to connect to Gallagher controller & daisy chain other HBUS devices)
- Dedicated tamper input, battery fault input, and power fault input

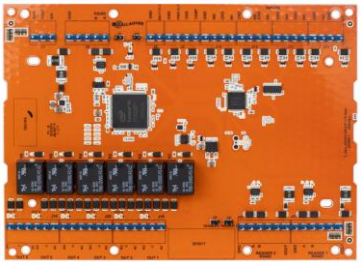

QuickSwitch ME52

The QuickSwitch ME02 board is a nonintelligent door module capable of supporting 2x doors.

The board provides connection for:

- 8 Inputs
- 6 Outputs
- 3 RS485 ports (2x for reader ports, 1x upstream to connect to Gallagher controller & daisy chain other HBUS devices)
- Dedicated tamper input, battery fault input, and power fault input

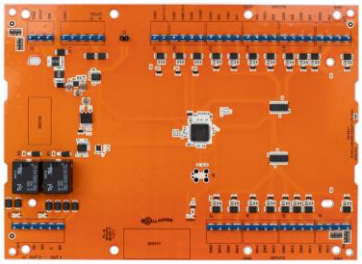

QuickSwitch ME16IN

The QuickSwitch ME16IN board provides inputs and outputs for door monitoring and control or general I/O functions.

The board provides connection for:

- 16 Inputs
- 2 Outputs
- 1 RS485 port
- Dedicated tamper input, battery fault input, and power fault input

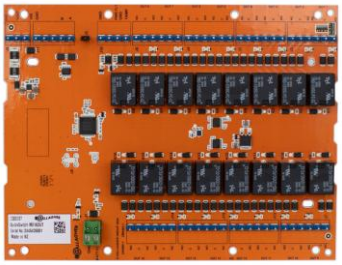

QuickSwitch ME16OUT

The QuickSwitch ME16OUT board provides outputs only.

The board provides connections for:

- 16 outputs
- 1 RS485 port
- Dedicated tamper input, battery fault input, and power fault input

Copyright © Gallagher Group Limited

2 Before you begin

2.1 Shipment contents

Check the shipment contains the following items:

	ME02	ME52	ME16IN	ME16OUT
QuickSwitch ME board	✓	✓	✓	✓
QuickSwitch ME cover	✓	✓	✓	✓
QuickSwitch ME component identification decal	✓	✓	✓	✓
4k7 ohm resistors	16	16	32	×
Wire-set	✓	×	×	×

2.2 Software

This product is supported from Command Centre v9.20 onwards.

The QuickSwitch device software is factory-loaded prior to shipment. New device software for the QuickSwitch is automatically downloaded from the Gallagher Controller v9.20 onwards.

To view the version of device software, as last reported by the board itself, click the **Connections** tab of the QuickSwitch item in Command Centre.

Note: The QuickSwitch item will display as offline until the item is fully configured. Controllers need to be upgraded to the latest release of 9.20 controller code (use of old, unsupported controller code like 9.10 may result in restarts and unpredicted behaviour).

2.3 Power supply

The QuickSwitch board requires a 13.6 Vdc ± 15% power supply. This is connected through the terminals labelled Vin and GND. An onboard 2 A resettable polyfuse provides over current protection.

Note: It is recommended that lock power be supplied via a separate cable from the control electronics, to minimise the possibility of high current spikes resulting from lock switching causing other electronic equipment to malfunction.

For UL or ULC compliant installations please refer to 3E2793 Command Centre UL Configuration Requirements and 3E5960 Command Centre ULC Configuration Requirements for specific details regarding power supply requirements.

2.4 Building Cabling

The QuickSwitch board requires a minimum cable size of 4 core 24 AWG (0.2 mm2) stranded security cable. This cable allows the transmission of data (2 wires) and power (2 wires). When using a single cable to carry both power supply and data, both the power supply voltage drop and data requirements must be considered.

For UL or ULC compliant installations please refer to 3E2793 Command Centre UL Configuration Requirements and 3E5960 Command Centre ULC Configuration Requirements for specific details regarding power supply requirements.

Copyright © Gallagher Group Limited

2.5 HBUS cabling topology

The HBUS communications protocol is based on the RS485 standard and allows the module to communicate over a distance of up to 500 m (1640 ft).

The cabling between HBUS devices should be done in a "daisy chain" topology, (i.e. A "T" or "Star" topology should not be used between devices).

2.6 Termination

The start and end devices on an HBUS circuit should be terminated using 120 ohm resistance. If the QuickSwitch Board is the start or end device on an HBUS circuit, terminate the board by connecting the supplied on-board termination jumper (J5) to the board. The location of the termination jumper (J5) is shown in section *"4. Connections"* later in this note.

2.7 Device Limits

The QuickSwitch board supports 2 x HBUS readers per RS485 Reader Port.

2.8 QuickSwitch Cabling Topology

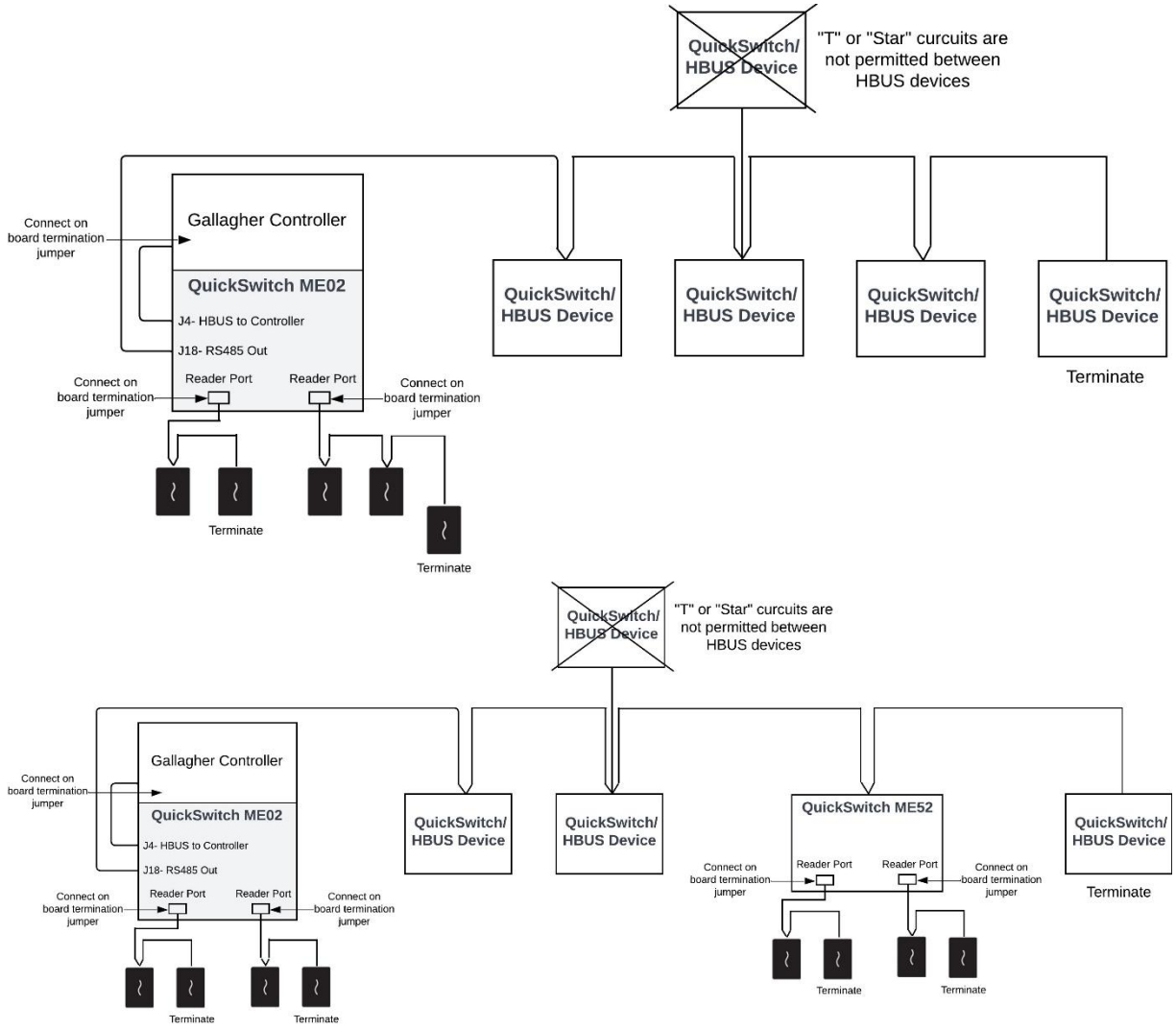

Copyright © Gallagher Group Limited

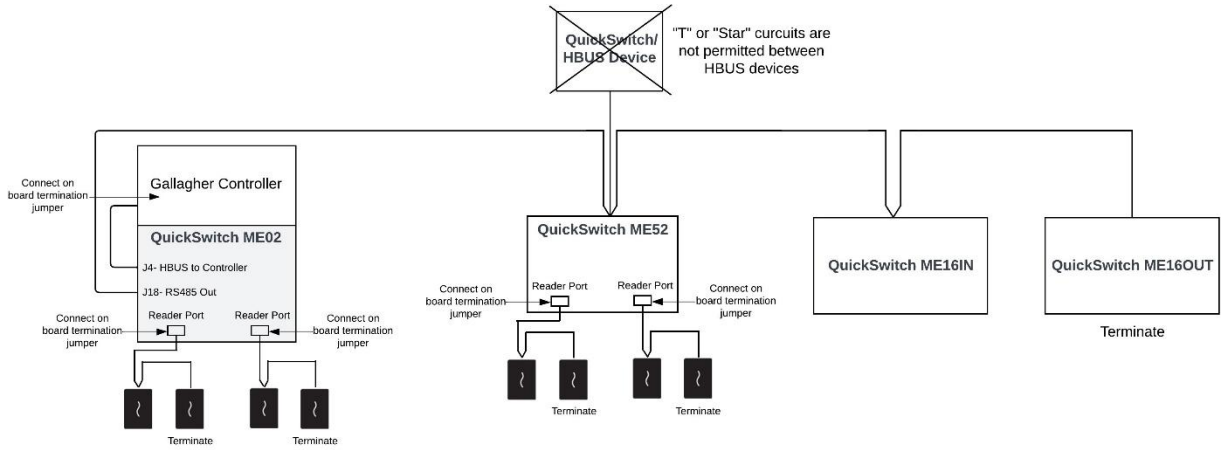

3 Installation

3.1 Installing QuickSwitch ME02

1. Remove the screws and disconnect the terminals from the current Controller. Install the QuickSwitch ME02 board in its place.
2. Attach the existing connector terminals to their corresponding positions on the QuickSwitch ME02 board.
   Note: If you are using Wiegand or OSDP readers, replace them with HBUS readers.
3. Where a Gallagher Controller 7000 is required, secure the Controller 7000 onto the QuickSwitch board's mounting cover using the four screws provided.
   Refer to section *"5. Gallagher Controller Mounting"* for mounting details.

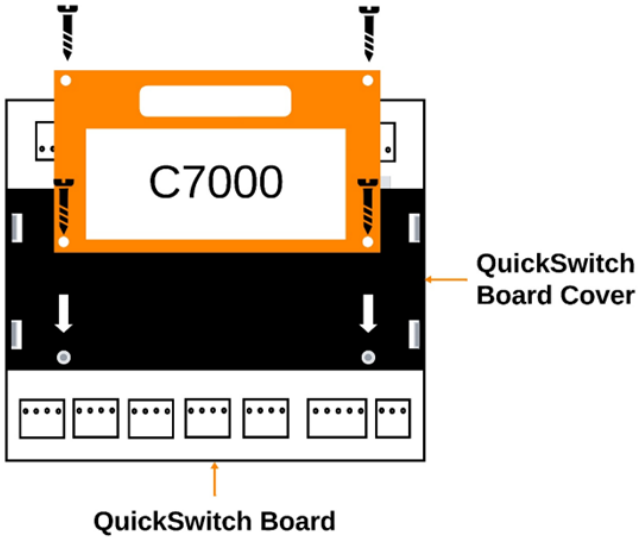

4. Connect the the wire-set Red & Black (provided with the QuickSwich ME02 board), to the Gallagher Controller VIN.
5. Connect the wire-set Green & Brown (provided with the QuickSwich ME02 board), to the Gallagher Controller RS485 terminal A&B.

Copyright © Gallagher Group Limited

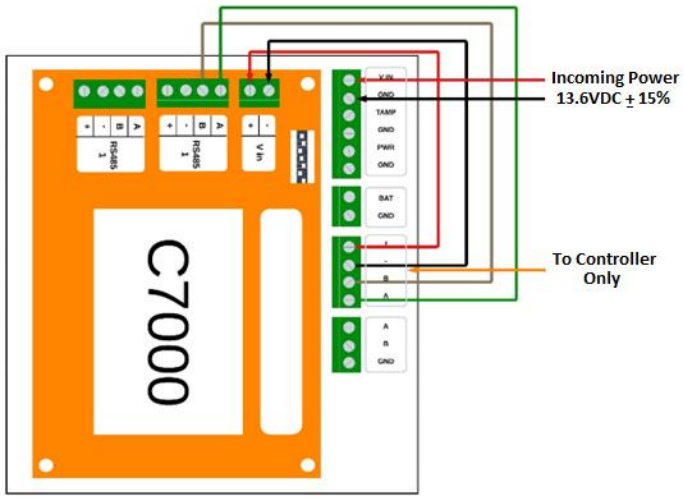

QuickSwitch ME02

6. Connect the door readers, inputs, and outputs as detailed in section *"4. Connections"* next.
7. Connect the incoming power (13.6 Vdc ± 15%) to the VIN (J17) on the QuickSwitch ME02 Board.
8. Fix the component identification decal inside the Cabinet door. This decal enables you to enter wiring and connection details and identifies the location and designation of cable connections, etc.
9. Configure the board in Command Centre as a 'QuickSwitch Board'. Refer to "Configuring an HBUS QuickSwitch Board" in the *Command Centre Configuration Client Online Help*.

3.2 Installing QuickSwitch ME52, ME16IN or ME16OUT

1. Remove the screws and disconnect the terminals from the current Controller. Install the QuickSwitch ME02 board in its place.
2. Attach the existing connector terminals to their corresponding positions on the QuickSwitch board.
   Note: If you are using Wiegand or OSDP readers, replace them with HBUS readers.
3. Where a Gallagher Controller 7000 is required, secure the Controller 7000 onto the QuickSwitch board's mounting cover using the four screws provided.
   Refer to section *"5. Gallagher Controller Mounting"* for mounting details.
4. Connect required inputs, outputs and reader ports as needed.
5. Connect the incoming power 13.6Vdc ± 15% to the VIN on the QuickSwitch board.
6. Fix the component identification decal inside the Cabinet door. This decal enables you to enter wiring and connection details and identifies the location and designation of cable connections, etc.
7. Configure the board in Command Centre as a 'QuickSwitch Board'. Refer to "Configuring an HBUS QuickSwitch Board" in the *Command Centre Configuration Client Online Help.*

Copyright © Gallagher Group Limited

4 Connections

4.1 ME02 Connections

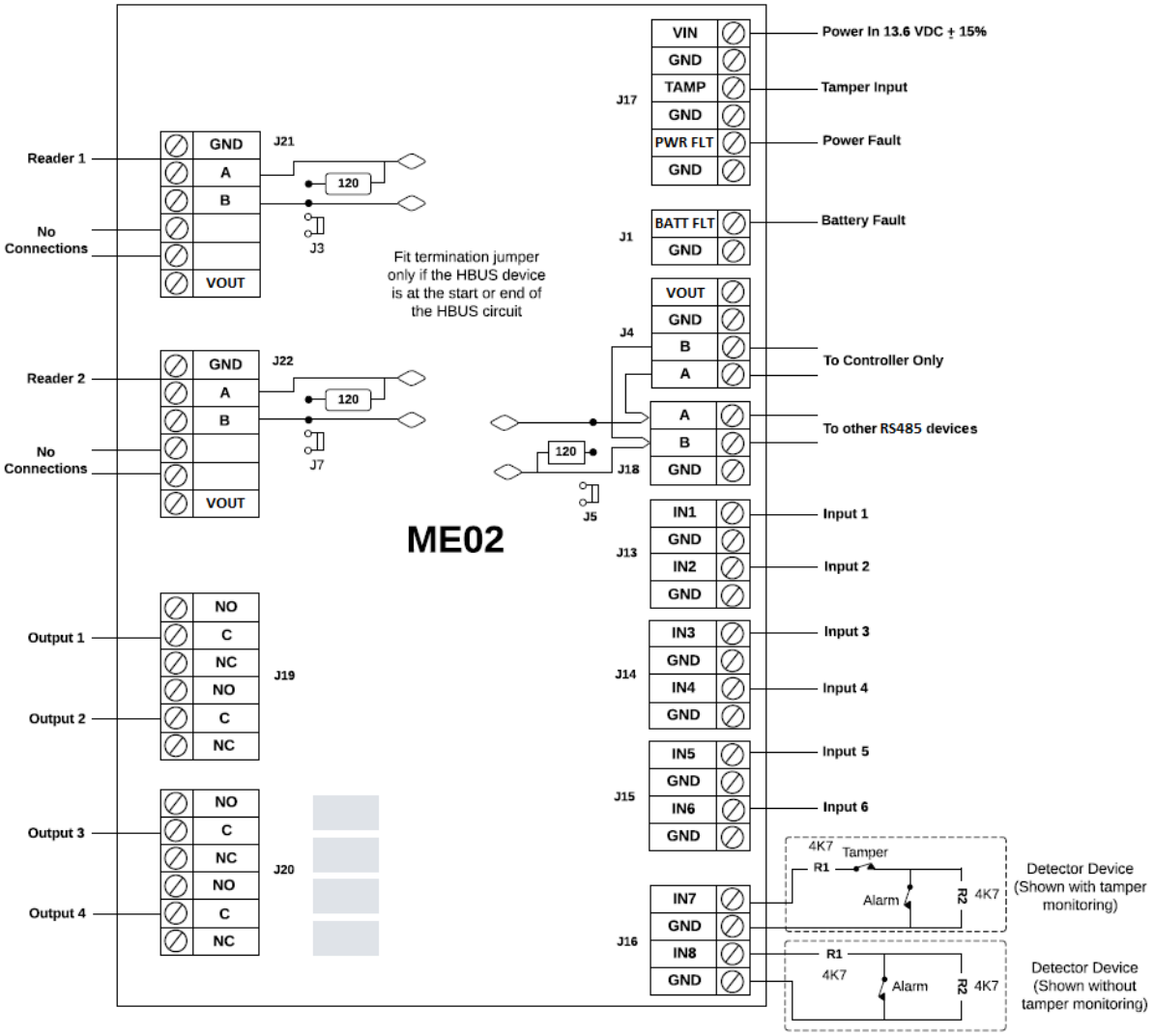

Copyright © Gallagher Group Limited

4.2 ME52 Connections

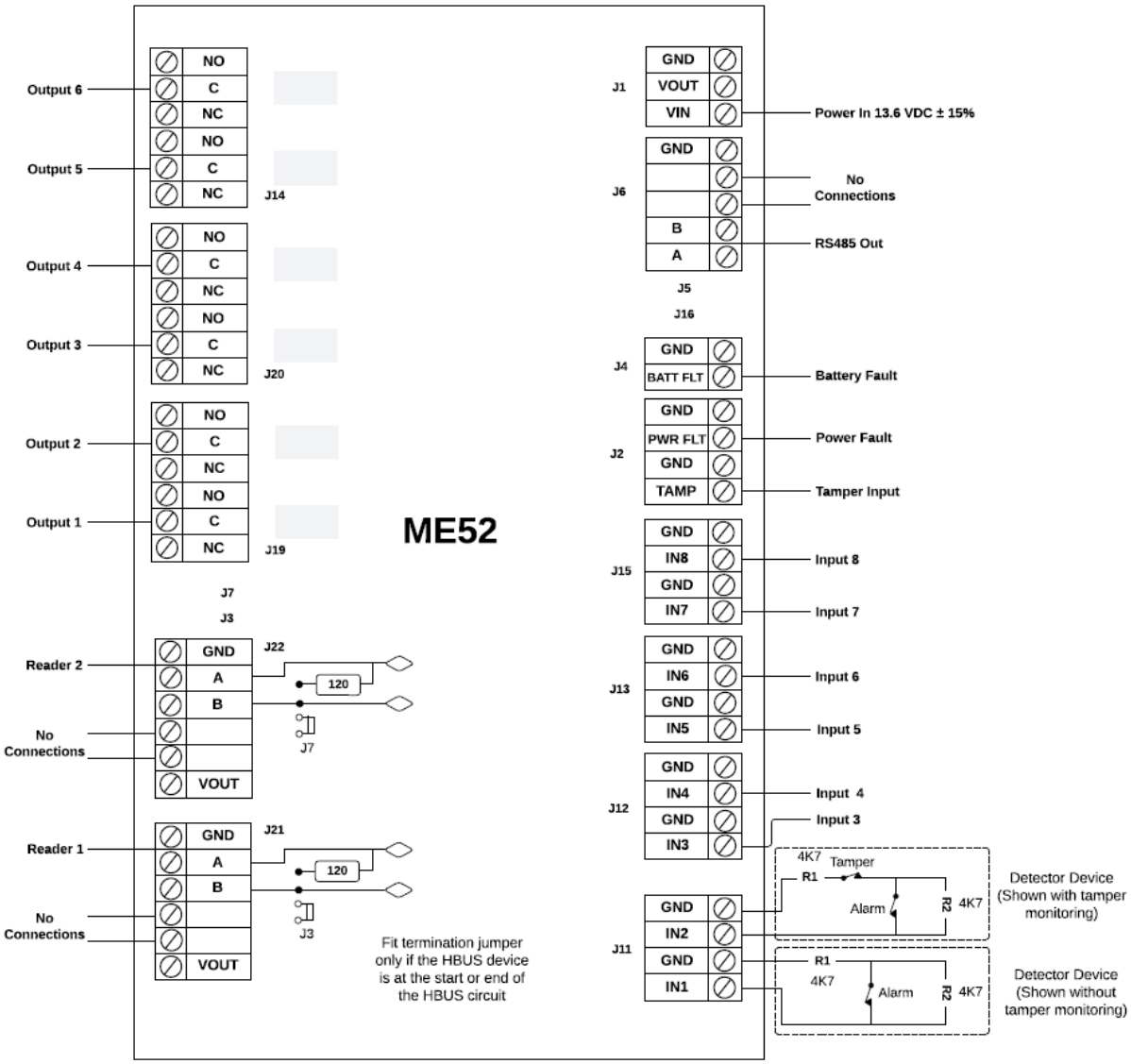

Copyright © Gallagher Group Limited

4.3 ME16IN Connections

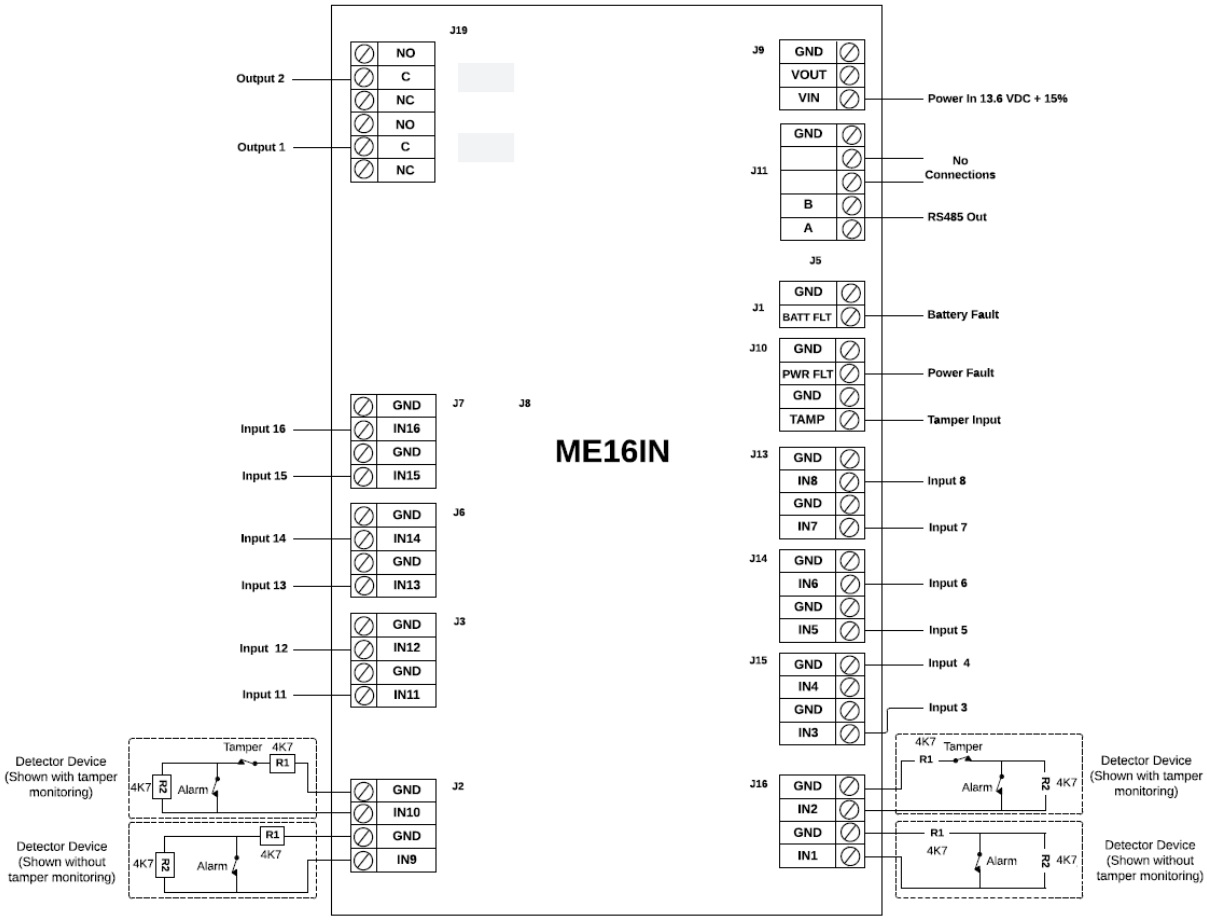

Copyright © Gallagher Group Limited

4.4 ME16OUT Connections

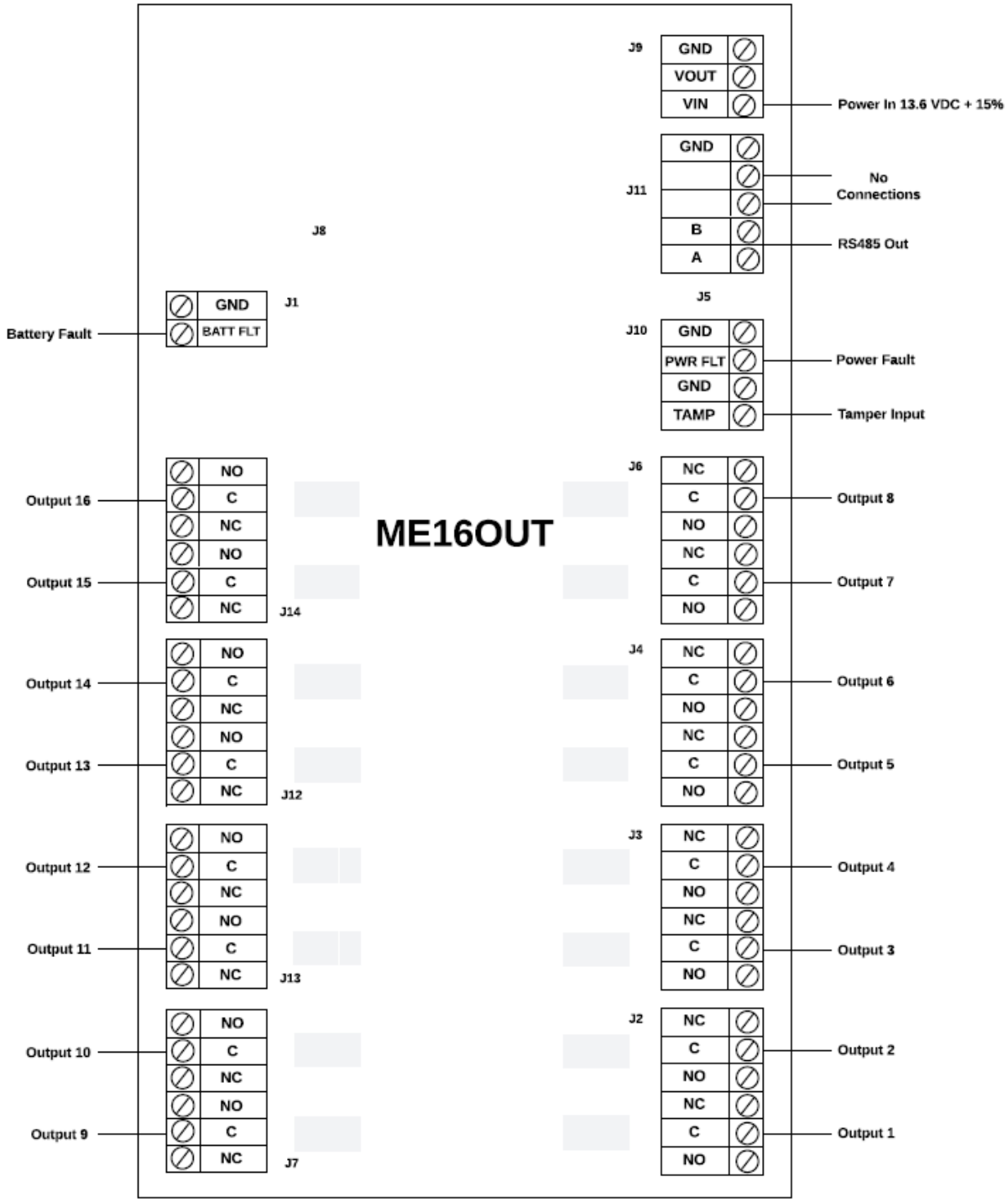

Copyright © Gallagher Group Limited

4.5 Balanced Inputs

Cabling should be a minimum size of 24 AWG (0.2 mm2) for all balanced inputs.

To ensure correct tamper detection (closed or open circuit), the balanced inputs require 4k7 ohm resistors to be connected as close as possible to the device being monitored.

When the monitored device incorporates a normally closed tamper switch, it can be wired in series with resistor R1.

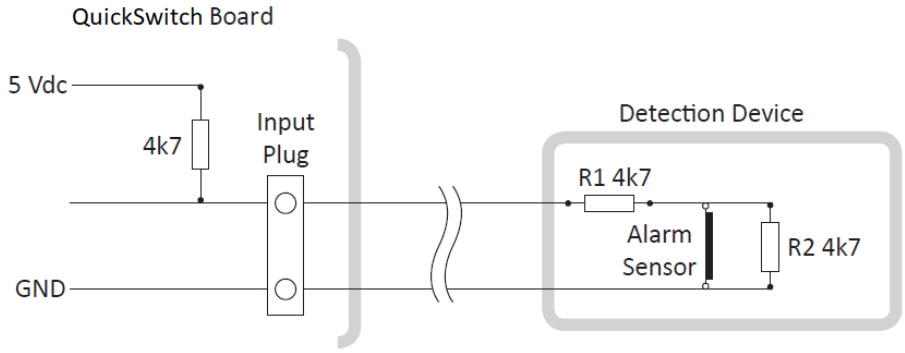

Resistor values can be configured for a QuickSwitch board in Command Centre (via the EOL Resistors property page). Refer to the topic "Configuring EOL Resistors for devices" in the *Command Centre Configuration Client Online Help*.

4.6 Output Relays

The cabling to and from the relay connectors must be capable of carrying sufficient current for the device the relay is controlling. Each relay circuit is rated:

- 3 A at 24 Vdc/ac for a resistive load
- 1 A at 24 Vdc/ac for an inductive load

Ensure back EMF snubbing components (a diode or Metal Oxide Varistor) are fitted to inductive loads to prevent voltage spikes from causing equipment to malfunction.

4.7 Tamper input

Check section *"4. Connections"* for the location of the tamper input. The tamper input monitors "Open" or "Closed" contact. The normal state is Open- "Tampered" state. Connecting this input directly to GND will change it to "Not Tampered" state.

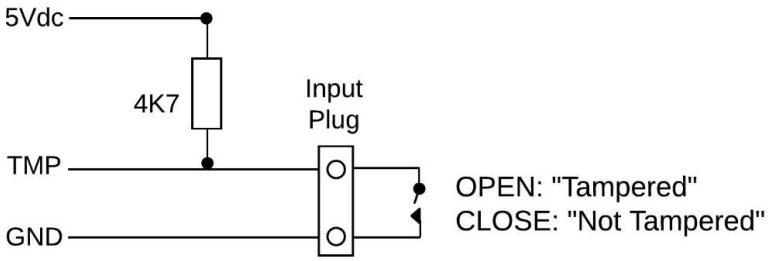

Note: To prevent incorrect (or continuous) tamper alarms being generated QuickSwitch that are not being used for tamper monitoring, a Command Centre operator will need to open the properties for the QuickSwitch item in Command Centre, click the Status and Overrides tab and check the disabled Tamper checkbox.

Copyright © Gallagher Group Limited

4.8 Power Fault Input

Check section *"4. Connections"* for the location of the power fault input. The power fault input monitors "Open" or "Closed" contact. The input will move to the "alarm" state when the contact is open and will move to the "restored" state when closed.

4.9 Battery Fault Input

Check section *"4. Connections"* for the location of the battery fault input. The battery fault input monitors "Open" or "Closed" contact. The input will move to the "alarm" state when the contact is open and will move to the "restored" state when closed.

Note: A jumper wire is already present on the Battery Fault Input plug. This connects the input directly to GND and makes the default state normal.

5 Gallagher Controller Mounting

A Gallagher Controller 7000 can be mounted on top of the QuickSwich board using the x4 screws provided with the Controller. Place the Controller on top of the QuickSwitch board cover in alignment with the four standoffs in each corner.

This provides the installation of a Gallagher Controller within the original space occupied by the replaced control panel, eliminating the need for additional cabinet space.



Copyright © Gallagher Group Limited

6 Hardware Architecture

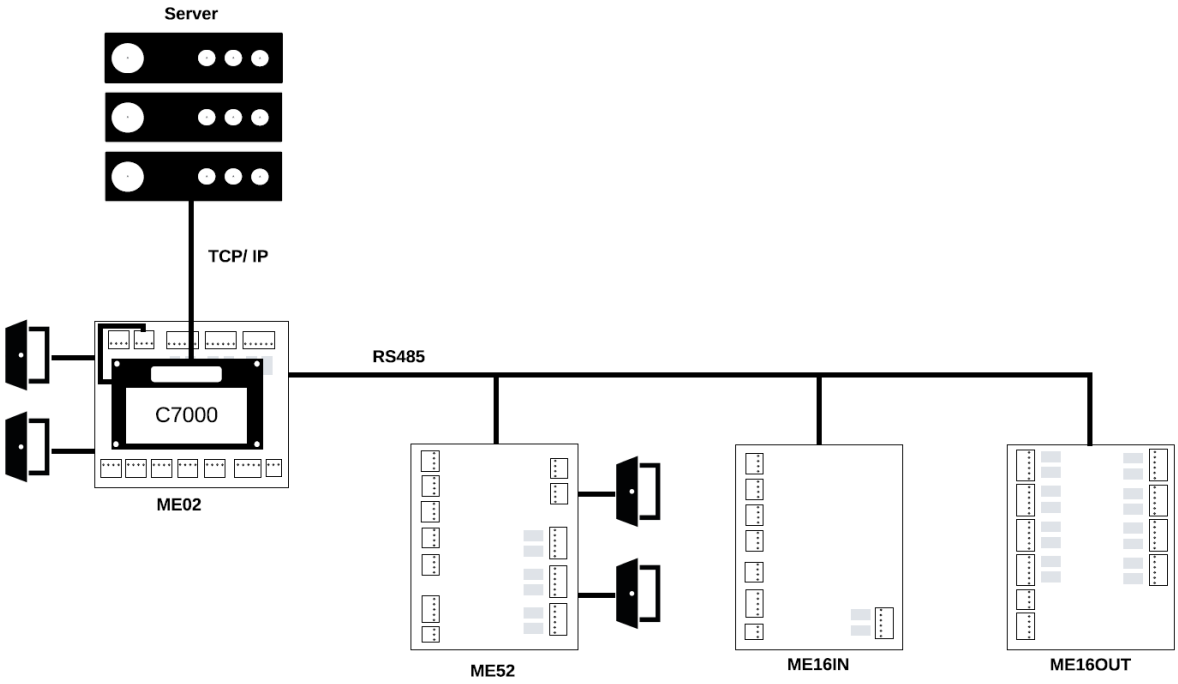

7 HBUS LED Diagnostic Indications

Diagnostic LED	Diagnostic indication
3 Flash (Red)	No communications with the Controller.
2 Flash (Red)	Communications with the Controller, but board is not configured.
1 Flash (Red)	Fully configured and functioning normally.

8 Accessories

Accessory	Part Number
QuickSwitch LN Series Connector Pack, includes: • X100, 2-pin connectors • X60, 3-pin connectors	C300719

Copyright © Gallagher Group Limited

9 Technical specifications

Product				
Part Number	C300700	C300701	C300706	C300707
Description	QuickSwitch ME2	QuickSwitch ME52	QuickSwitch ME16IN	QuickSwitch ME16OUT
Power Supply				
Operating voltage (Vin)	13.6 Vdc ± 15%	13.6 Vdc ± 15%	13.6 Vdc ± 15%	13.6 Vdc ± 15%
Fuse	Onboard 2 A resettable polyfused	Onboard 2 A resettable polyfused	Onboard 2 A resettable polyfused	Onboard 2 A resettable polyfused
Operating Current Relays OFF: Relays ON:	 50mA DC 200mA DC	 50mA DC 275mA DC	 40mA DC 115mA DC	 30mA DC 650mA DC
Output Power (Vout)	Vin pass through	Vin pass through with 1.5A polyfuse protection	Vin pass through with 1.5A polyfuse protection	Vin pass through with 1.5A polyfuse protection
Reader Port Output Power	600mA. Around 0.5V less than Vin	600mA. Around 0.5V less than Vin	-	-
Environmental				
Temperature range	-10 °C to +70 °C (+14 °F to +158 °F)	-10 °C to +70 °C (+14 °F to +158 °F)	-10 °C to +70 °C (+14 °F to +158 °F)	-10 °C to +70 °C (+14 °F to +158 °F)
Humidity	95% noncondensing	95% noncondensing	95% noncondensing	95% noncondensing
Connections				
Inputs Format:	8 4 state monitoring (configured in Command Centre)	8 4 state monitoring (configured in Command Centre)	16 4 state monitoring (configured in Command Centre)	none
Tamper Inputs	1	1	1	1
Battery Fault Input	1	1	1	1
Power Fault Input	1	1	1	1
Outputs Relay Contact Rating:	4 24 Vdc/ac, 3A resistive, 1A inductive	6 24 Vdc/ac, 3A resistive, 1A inductive	2 24 Vdc/ac, 3A resistive, 1A inductive	16 24 Vdc/ac, 3A resistive, 1A inductive
RS485 Ports	3*	3	1	1
Shipping dimensions				
Height 292 mm (11.4 in) Width 247 mm (9.7 in) Depth 45 mm (1.7 in)				

* There are 3 dedicated ports but 4 RS485 connections are provided:

- 2 for readers,
- 1 for upstream connection to Gallagher Controller, and
- 1 to daisy chain other HBUS devices.

The latter two connections share the same RS485 transceiver on board.

Copyright © Gallagher Group Limited

10 Approvals and Compliance Standards



This symbol on the product or its packaging indicates that this product must not be disposed of with other waste. Instead, it is your responsibility to dispose of your waste equipment by handing it over to a designated collection point for the recycling of waste electrical and electronic equipment. The separate collection and recycling of your waste equipment at the time of disposal will help conserve natural resources and ensure that it is recycled in a manner that protects human health and the environment. For more information about where you can drop off your waste equipment for recycling, please contact your local city recycling office or the dealer from whom you purchased the product.

RoHS COMPLIANT

This product complies with the environmental regulations for the Restriction of Hazardous Substances in electrical and electronic equipment (RoHS). The RoHS directive prohibits the use of electronic equipment containing certain hazardous substances in the European Union.

UL Installations

For a guide to configuring the Gallagher system to the UL Standard, please refer to the document appropriate to your location:
- *"3E2793 Gallagher Command Centre UL Configuration Requirements"* (for USA), or
- *"3E5960 Gallagher Command Centre ULC Configuration Requirements"* (for Canada).

Installers must ensure these instructions are followed to ensure the installed system is UL compliant.

UL CERTIFIED SAFETY SECURITY US-CA BP8861

UL294 - Access Control
UL2610 - Commercial Burglary
CAN/ULC-S304- Commercial Burglary
CAN/ULC 60839-11-1- Access Control

FCC

This device complies with part 15 of the FCC Rules. Operation is subject to the following two conditions: (1) This device may not cause harmful interference, and (2) this device must accept any interference received, including interference that may cause undesired operation.

Note: Changes or modifications not expressly approved by Gallagher Limited could void the user's authority to operate this equipment.

Note: This equipment has been tested and found to comply with the limits for a Class B digital device, pursuant to part 15 of the FCC Rules. These limits are designed to provide reasonable protection against harmful interference in a residential installation. This equipment generates, uses and can radiate radio frequency energy and, if not installed and used in accordance with the instructions, may cause harmful interference to radio communications. However, there is no guarantee that interference will not occur in a particular installation. If this equipment does cause harmful interference to radio or television reception, which can be determined by turning the equipment off and on, the user is encouraged to try to correct the interference by one or more of the following measures:

- Reorient or relocate the receiving antenna.
- Increase the separation between the equipment and receiver.
- Connect the equipment into an outlet on a circuit different from that to which the receiver is connected.
- Consult the dealer or an experienced radio/TV technician for help.

UK CA CE

Copyright © Gallagher Group Limited

11 Mounting Dimensions

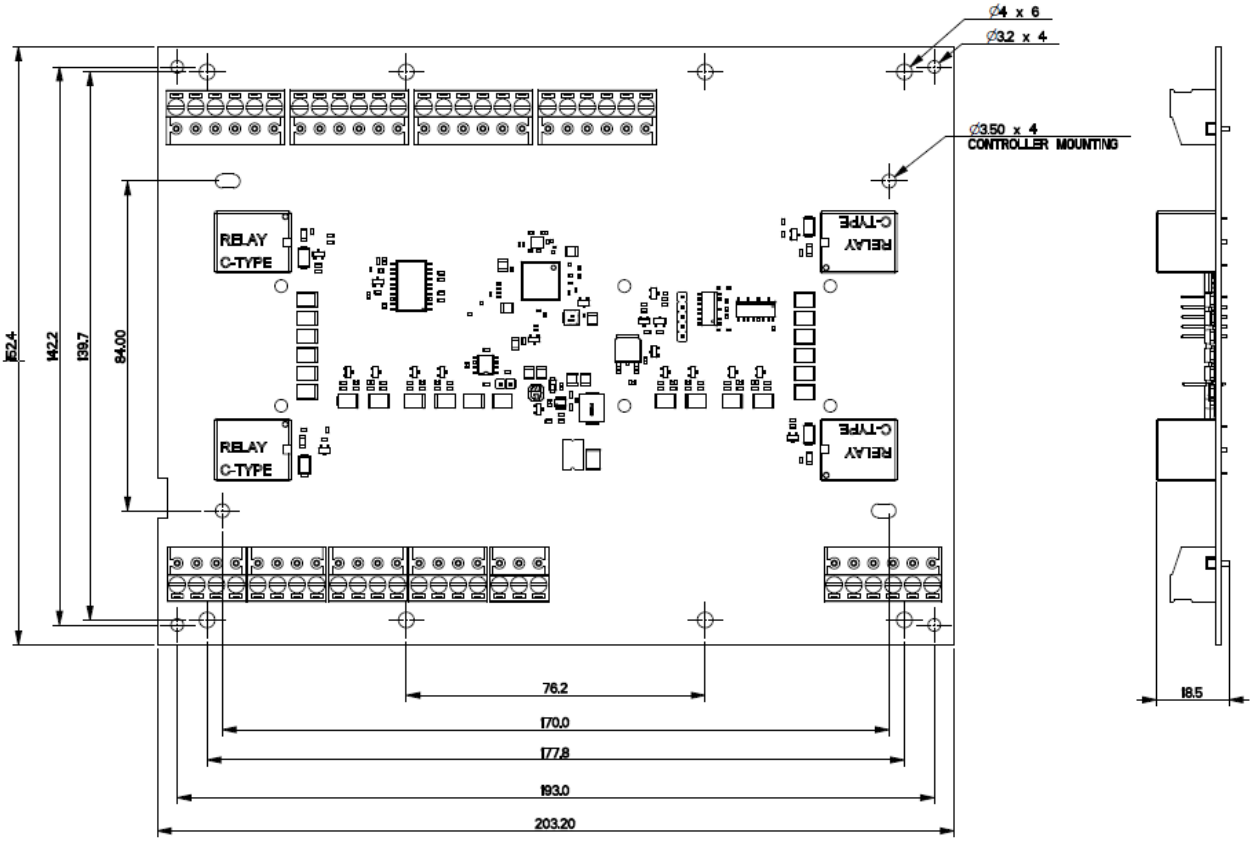

IMPORTANT

This picture is not to scale, therefore use the measurements provided.

Copyright © Gallagher Group Limited