Gallagher

QuickSwitch AM

Installation Note

QuickSwitch AM50-2D: C300722
QuickSwitch AM50-4D: C300724
QuickSwitch AM50-8D: C300726

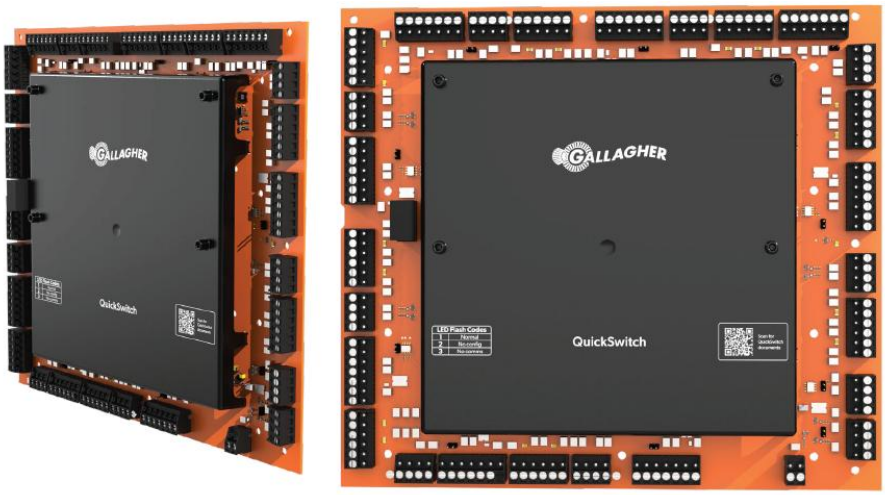

Copyright © Gallagher Group Limited

Disclaimer

This document gives certain information about products and/or services provided by Gallagher Group Limited or its related companies (referred to as "Gallagher Group").

The information is indicative only and is subject to change without notice meaning it may be out of date at any given time. Although every commercially reasonable effort has been taken to ensure the quality and accuracy of the information, Gallagher Group makes no representation as to its accuracy or completeness and it should not be relied on as such. To the extent permitted by law, all express or implied, or other representations or warranties in relation to the information are expressly excluded.

Neither Gallagher Group nor any of its directors, employees or other representatives shall be responsible for any loss that you may incur, either directly or indirectly, arising from any use or decisions based on the information provided.

Except where stated otherwise, the information is subject to copyright owned by Gallagher Group and you may not sell it without permission. Gallagher Group is the owner of all trademarks reproduced in this information. All trademarks which are not the property of Gallagher Group, are acknowledged.

Copyright © Gallagher Group Ltd 2025. All rights reserved.

Contents

1 Introduction 4

2 Before you begin 5
- 2.1 Shipment contents 5
- 2.2 Software 5
- 2.3 Power supply 5
- 2.4 Building Cabling 5
- 2.5 HBUS cabling topology 5
- 2.6 Termination 6
- 2.7 Device Limits 6
- 2.8 QuickSwitch Cabling Topology 6

3 Installation 8

4 Connections 9
- 4.1 AM50-2D Connections 9
- 4.2 AM50-4D Connections 9
- 4.3 AM50-8D Connections 10
- 4.4 Balanced Inputs 10
- 4.5 Output Relays 11
- 4.6 Tamper input 11
- 4.7 Power Fault Input 11
- 4.8 Battery Fault Input 11

5 Gallagher Controller Mounting 12
- 5.1 AM50-2D 12
- 5.2 AM50-4D 12
- 5.3 AM50-8D 13

6 Hardware Architecture 13
- 6.1 Existing Architecture 13
- 6.2 Gallagher Architecture Options 14

7 HBUS LED Diagnostic Indications 15

8 Technical specifications 16

9 Approvals and Compliance Standards 17

10 Mounting Dimensions 18
- 10.1 AM50-2D 18
- 10.2 AM50-4D 18
- 10.3 AM50-8D 19

Copyright © Gallagher Group Limited

1 Introduction

The Gallagher QuickSwitch AM boards provide a complete and cost-effective migration path to Gallagher. Each board replicates the layout and terminal locations of commonly used security hardware, allowing sites to upgrade to Gallagher more efficiently.



QuickSwitch AM50-2D

The QuickSwitch AM50-2D board is a nonintelligent door module capable of supporting 2x doors with the use of a Gallagher Controller.

Additional HBUS devices can be daisy chained from the AM50-2D board to extend the system to support a maximum of x10 doors per controller.

The board provides connection for:

- 4 Inputs
- 4 Outputs
- 3 RS485 ports (2x for reader ports, 1x upstream to connect to Gallagher controller & daisy chain other HBUS devices)
- Dedicated tamper, battery fault, and power fault inputs



QuickSwitch AM50-4D

The QuickSwitch AM50-4D board is a nonintelligent door module capable of supporting 4x doors with the use of a Gallagher Controller.

Additional HBUS devices can be daisy chained from the AM50-4D board to extend the system to support a maximum of x10 doors per controller.

The board provides connection for:

- 8 Inputs
- 8 Outputs
- 5 RS485 port (4x for reader ports, 1x upstream to connect to Gallagher controller & daisy chain other HBUS devices)
- Dedicated tamper, battery fault, and power fault inputs.



QuickSwitch AM50-8D

The QuickSwitch AM50-8D board is a nonintelligent door module capable of supporting 8x doors with the use of a Gallagher Controller.

Additional HBUS devices can be daisy chained from the AM50-8D board to extend the system to support a maximum of x10 doors per controller.

The board provides connection for:

- 16 Inputs
- 16 Outputs
- 9 RS485 port (8x for reader ports, 1x upstream to connect to Gallagher controller & daisy chain other HBUS devices)
- Dedicated tamper, battery fault, and power fault inputs.

Copyright © Gallagher Group Limited

2 Before you begin

2.1 Shipment contents

Check the shipment contains the following items:

	AM50-2D	AM50-4D	AM50-8D
QuickSwitch AM board	✓	✓	✓
QuickSwitch AM cover	✓	✓	✓
QuickSwitch AM component identification decal	✓	✓	✓
4k7 ohm resistors	8	16	32

2.2 Software

This product is supported from Command Centre v9.20 onwards.

The QuickSwitch device software is factory-loaded prior to shipment. New device software for the QuickSwitch is automatically downloaded from the Gallagher Controller v9.20 onwards.

To view the version of device software, as last reported by the board itself, click the **Connections** tab of the QuickSwitch item in Command Centre.

Note: The QuickSwitch item will display as offline until the item is fully configured. Controllers need to be upgraded to the latest release of 9.20 controller code (use of old, unsupported controller code like 9.10 may result in restarts and unpredicted behaviour).

2.3 Power supply

The QuickSwitch board requires a 13.6 Vdc ± 15% power supply. This is connected through the terminals labelled Vin and GND. An onboard 2 A resettable polyfuse provides over current protection.

Note: It is recommended that lock power be supplied via a separate cable from the control electronics, to minimise the possibility of high current spikes resulting from lock switching causing other electronic equipment to malfunction.

For UL or ULC compliant installations please refer to 3E2793 Command Centre UL Configuration Requirements and 3E5960 Command Centre ULC Configuration Requirements for specific details regarding power supply requirements.

2.4 Building Cabling

The QuickSwitch board requires a minimum cable size of 4 core 24 AWG (0.2 mm2) stranded security cable. This cable allows the transmission of data (2 wires) and power (2 wires). When using a single cable to carry both power supply and data, both the power supply voltage drop and data requirements must be considered.

For UL or ULC compliant installations please refer to 3E2793 Command Centre UL Configuration Requirements and 3E5960 Command Centre ULC Configuration Requirements for specific details regarding power supply requirements.

2.5 HBUS cabling topology

The HBUS communications protocol is based on the RS485 standard and allows the module to communicate over a distance of up to 500 m (1640 ft).

The cabling between HBUS devices should be done in a "daisy chain" topology, (i.e. A "T" or "Star" topology should not be used between devices).

Copyright © Gallagher Group Limited

2.6 Termination

The start and end devices on an HBUS circuit should be terminated using 120 ohm resistance. If the QuickSwitch Board is the start or end device on an HBUS circuit, terminate the board by connecting the supplied on-board termination jumper to the board. The location of the termination jumper is shown in section *"4. Connections"* later in this note.

2.7 Device Limits

The QuickSwitch board supports 2 x HBUS readers per RS485 Reader Port.

2.8 QuickSwitch Cabling Topology

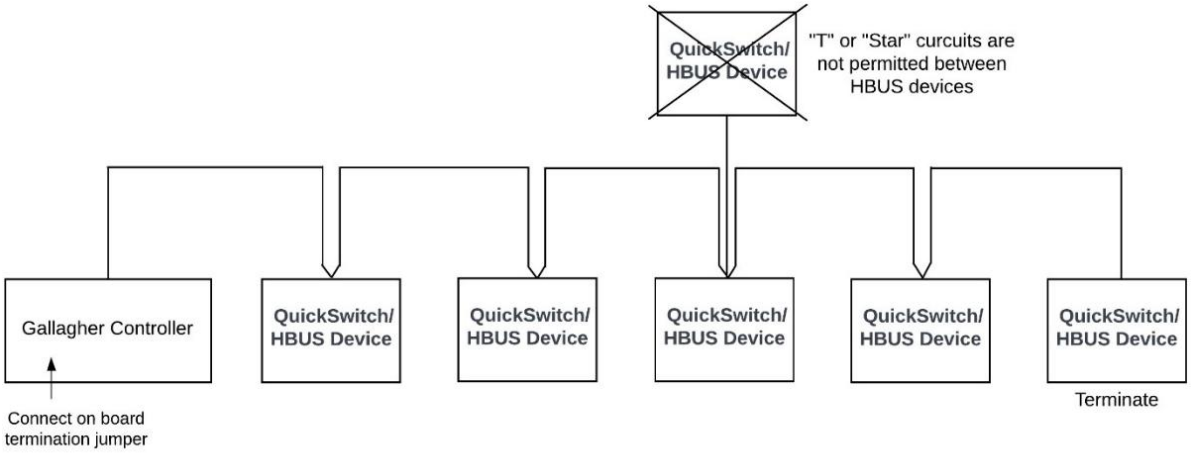

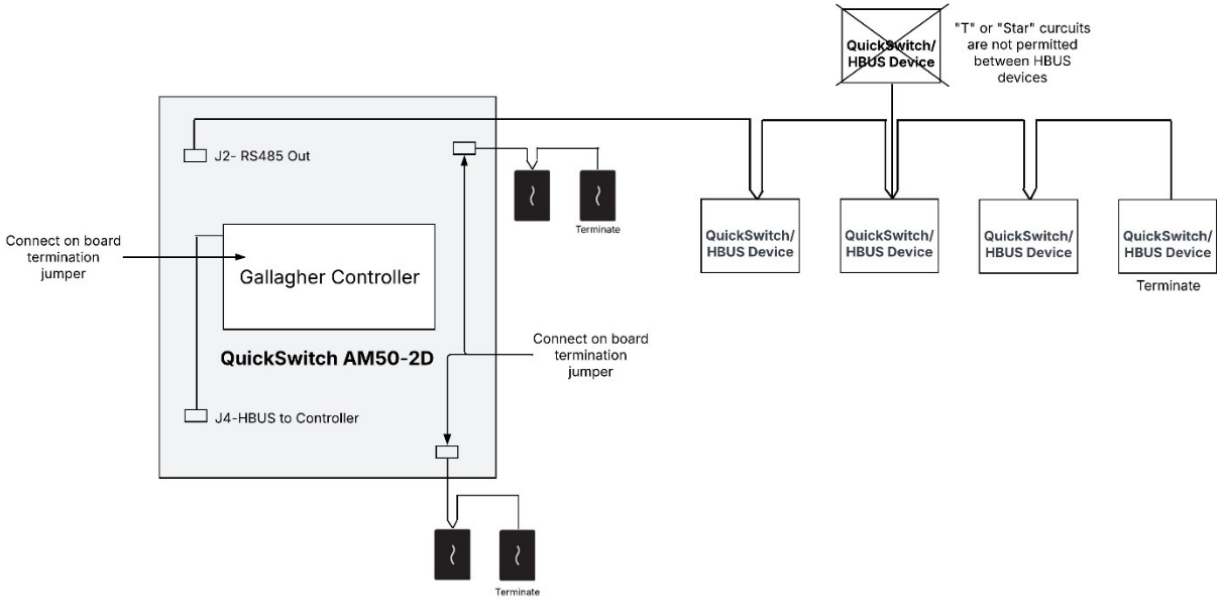

Copyright © Gallagher Group Limited

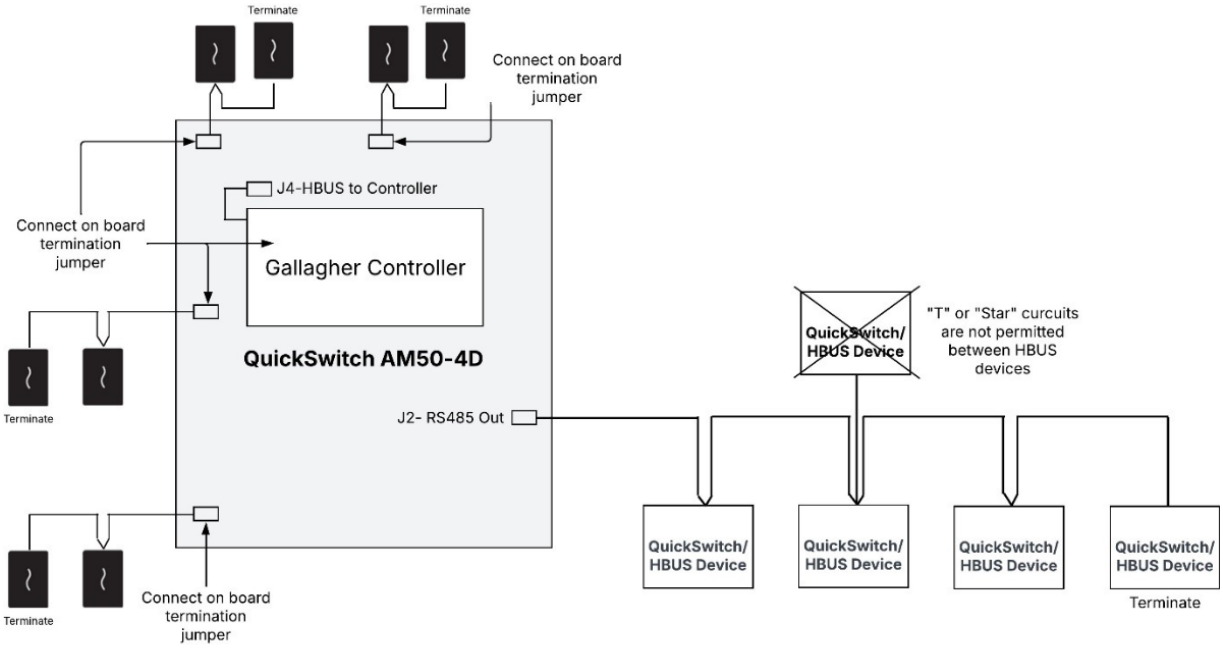

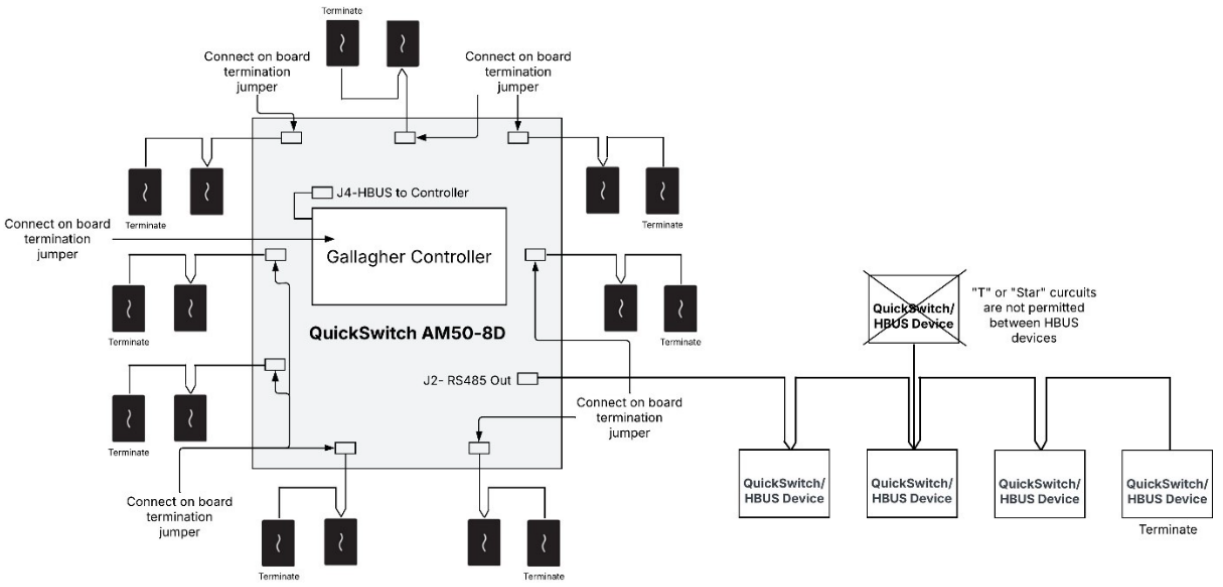

Copyright © Gallagher Group Limited

3 Installation

When replacing an Intelligent board for Gallagher:

1. Remove the screws and disconnect the terminals from the current board. Install the QuickSwitch AM50 board in its place.
2. Attach the existing connector terminals to their corresponding positions on the QuickSwitch AM50 board.

   Note: If you're using Weigand or OSDP readers, replace them with HBUS readers.
3. Where a Gallagher Controller 7000 is required (when replacing an intelligent board) secure the Controller 7000 onto of the QuickSwitch board's mounting cover using the four provided screws. For detailed instructions, refer to the *"5. Gallagher Controller Mounting"* section later in this note.

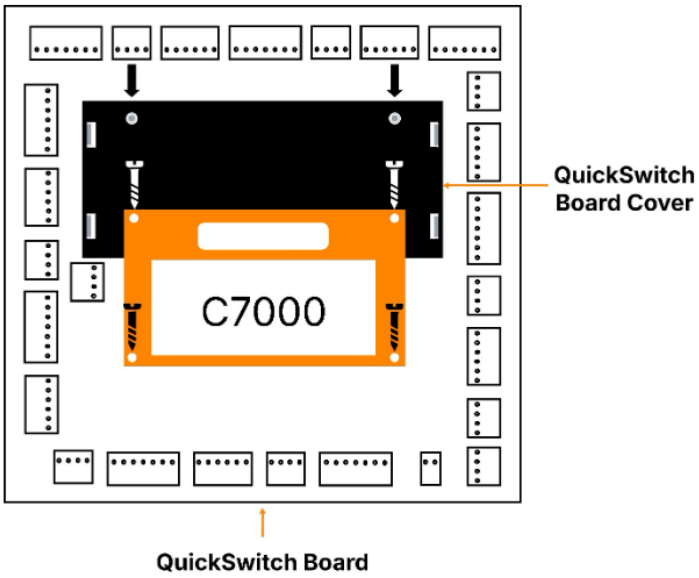

4. Connect the wire-set Red & Black, provided with the QuickSwitch AM50 board to the Gallagher Controller VIN. Also, connect the wire-set Green & Brown, provided with the QuickSwitch AM50 board to the Gallagher Controller RS485 terminal A&B.

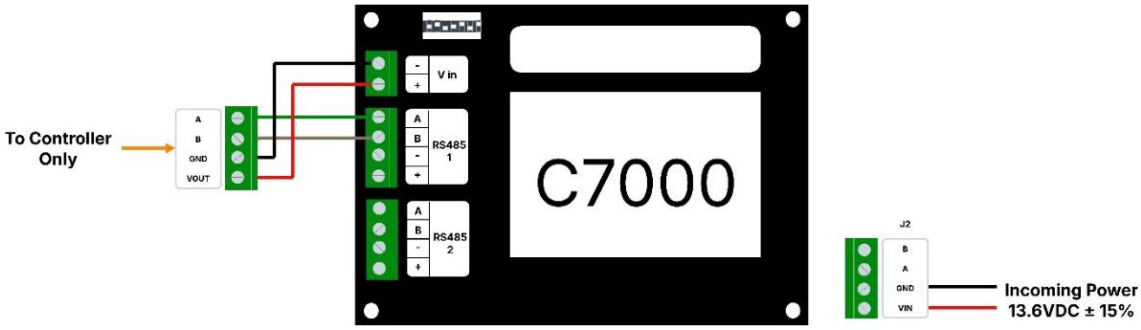

5. Connect the door readers, inputs, and outputs as detailed in section *"4. Connections"* next.
6. Connect the incoming power (13.6Vdc ± 15%) to the VIN (J2) on the QuickSwitch AM50 Board.
7. Fix the component identification decal inside the Cabinet door. This decal enables you to enter wiring and connection details and identifies the location and designation of cable connections, etc.
8. Configure the board in Command Centre as a 'QuickSwitch Board'. Refer to "Configuring an HBUS QuickSwitch Board" in the *Command Centre Configuration Client Online Help.*

Copyright © Gallagher Group Limited

4 Connections

4.1 AM50-2D Connections

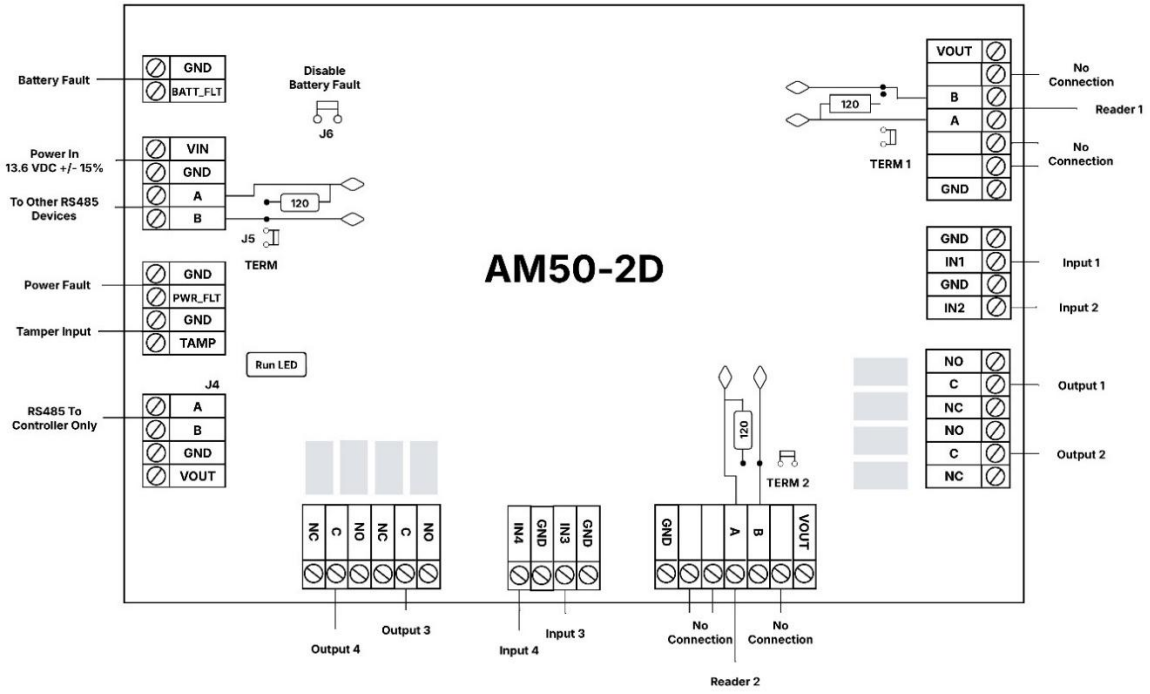

4.2 AM50-4D Connections

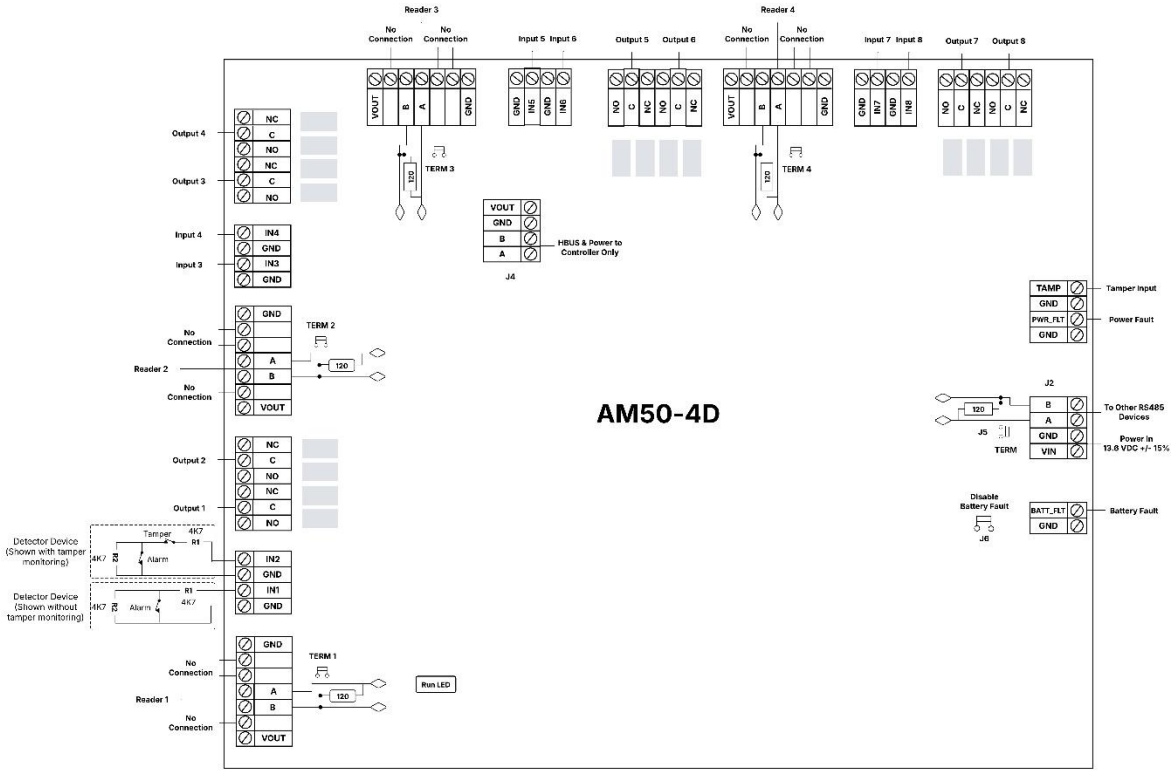

Copyright © Gallagher Group Limited

4.3 AM50-8D Connections

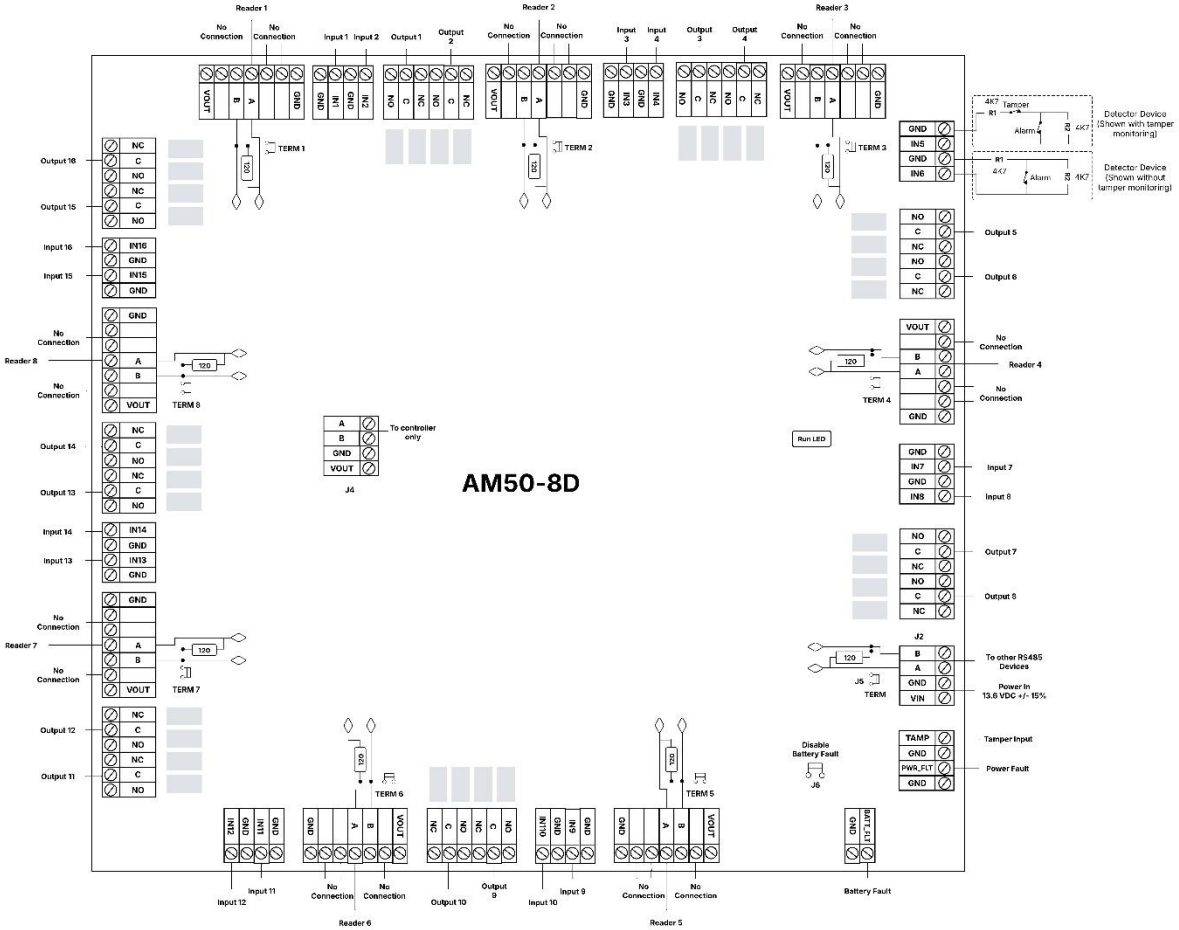

4.4 Balanced Inputs

Cabling should be a minimum size of 24 AWG (0.2 mm2) for all balanced inputs.

To ensure correct tamper detection (closed or open circuit), the balanced inputs require 4k7 ohm resistors to be connected as close as possible to the device being monitored.

When the monitored device incorporates a normally closed tamper switch, it can be wired in series with resistor R1.

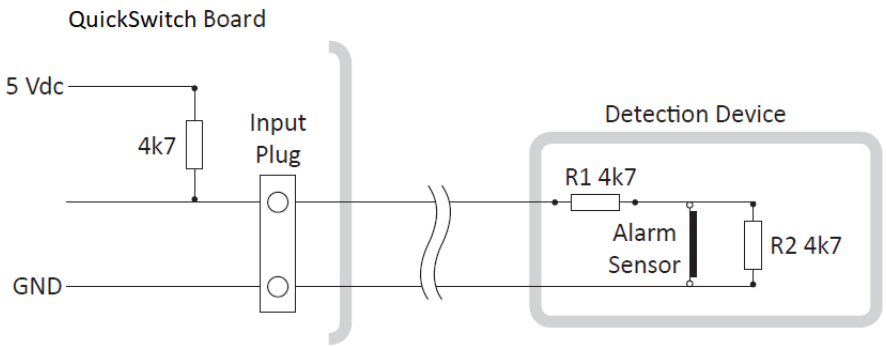

Resistor values can be configured for a QuickSwitch board in Command Centre (via the EOL Resistors property page). Refer to the topic "Configuring EOL Resistors for devices" in the *Command Centre Configuration Client Online Help*.

Copyright © Gallagher Group Limited

4.5 Output Relays

The cabling to and from the relay connectors must be capable of carrying sufficient current for the device the relay is controlling. Each relay circuit is rated:

- 3 A at 24 Vdc/ac for a resistive load
- 1 A at 24 Vdc/ac for an inductive load

Ensure back EMF snubbing components (a diode or Metal Oxide Varistor) are fitted to inductive loads to prevent voltage spikes from causing equipment to malfunction.

4.6 Tamper input

Check section *"4. Connections"* for the location of the tamper input. The tamper input monitors "Open" or "Closed" contact. The normal state is Open- "Tampered" state. Connecting this input directly to GND will change it to Closed- "Not Tampered" state.

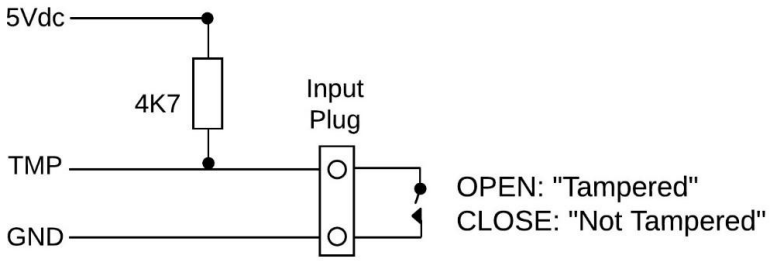

Note: To prevent incorrect (or continuous) tamper alarms being generated QuickSwitch AM50 that are not being used for tamper monitoring, a Command Centre operator will need to open the properties for the QuickSwitch item in Command Centre, click the Status and Overrides tab and check the disabled Tamper checkbox.

4.7 Power Fault Input

Check section *"4. Connections"* for the location of the power fault input. The power fault input monitors "Open" or "Closed" contact. The input will move to the "alarm" state when the contact is open and will move to the "restored" state when closed.

4.8 Battery Fault Input

Check section *"4. Connections"* for the location of the battery fault input. The battery fault input monitors "Open" or "Closed" contact. The input will move to the "alarm" state when the contact is open and will move to the "restored" state when closed.

Note: To enable the Battery Fault input, ensure the onboard jumper (J6) is removed.

Copyright © Gallagher Group Limited

5 Gallagher Controller Mounting

A Gallafgher Controller 7000 can be mounted on top of the QuickSwitch board using the 4 x screws provided with the Controller.

5.1 AM50-2D

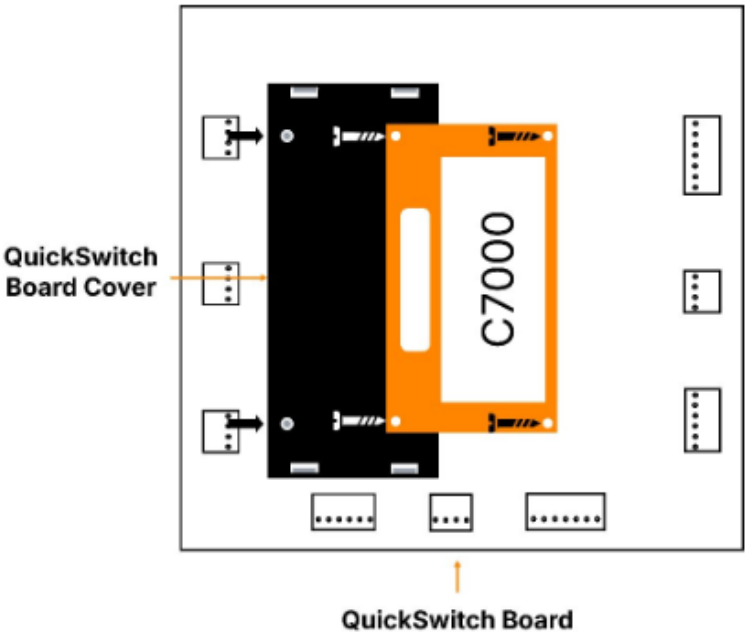

5.2 AM50-4D

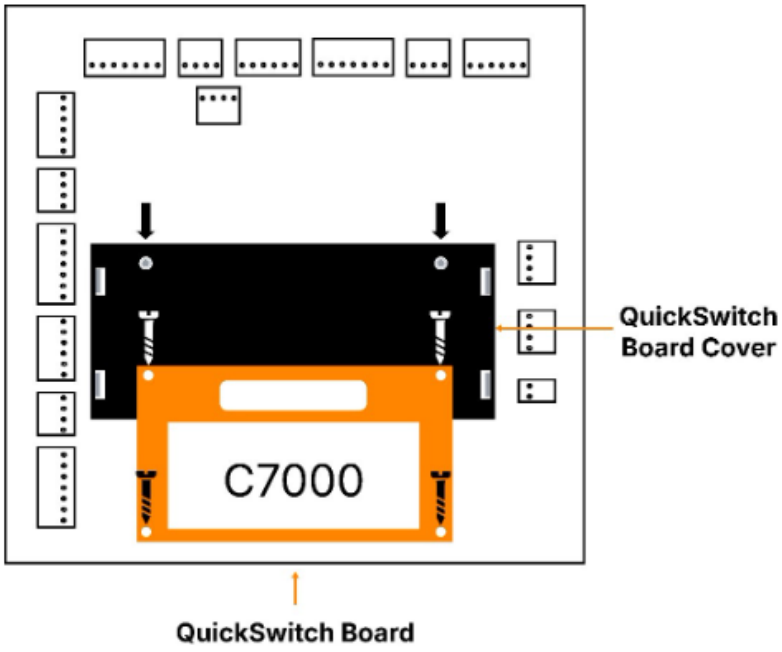

Copyright © Gallagher Group Limited

5.3 AM50-8D

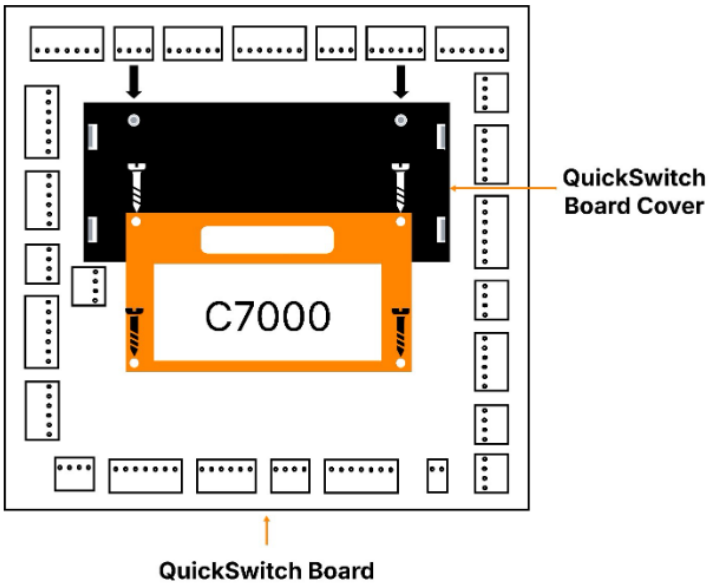

6 Hardware Architecture

For intelligent board replacements, allocate one Gallagher controller per 10 doors.
Gallagher controllers are not needed when using QuickSwitch for non-intelligent board replacements.

6.1 Existing Architecture

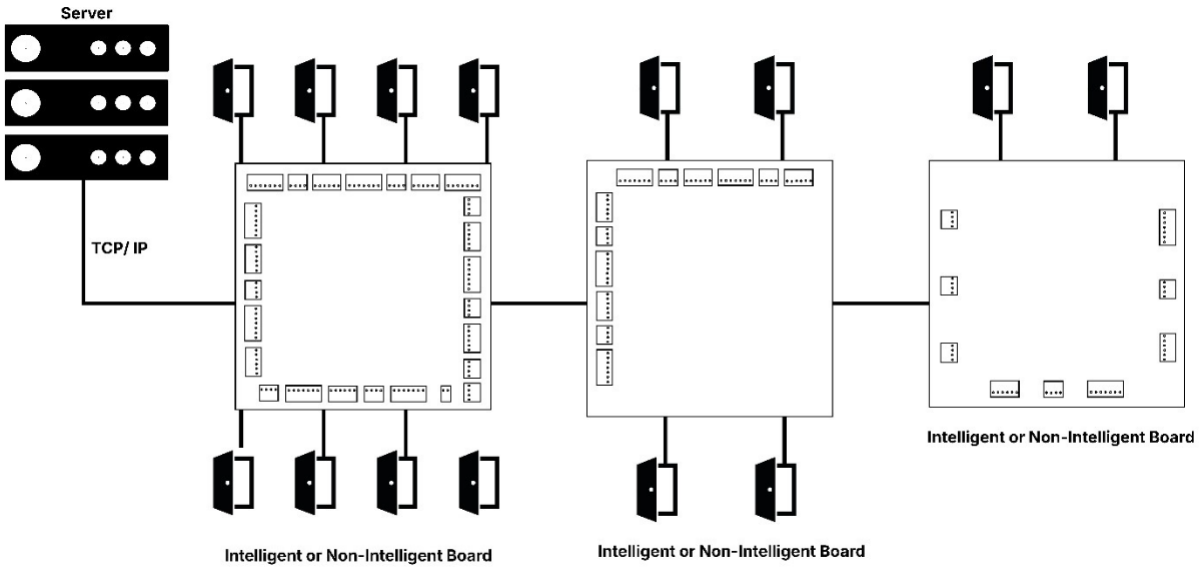

Copyright © Gallagher Group Limited

6.2 Gallagher Architecture Options

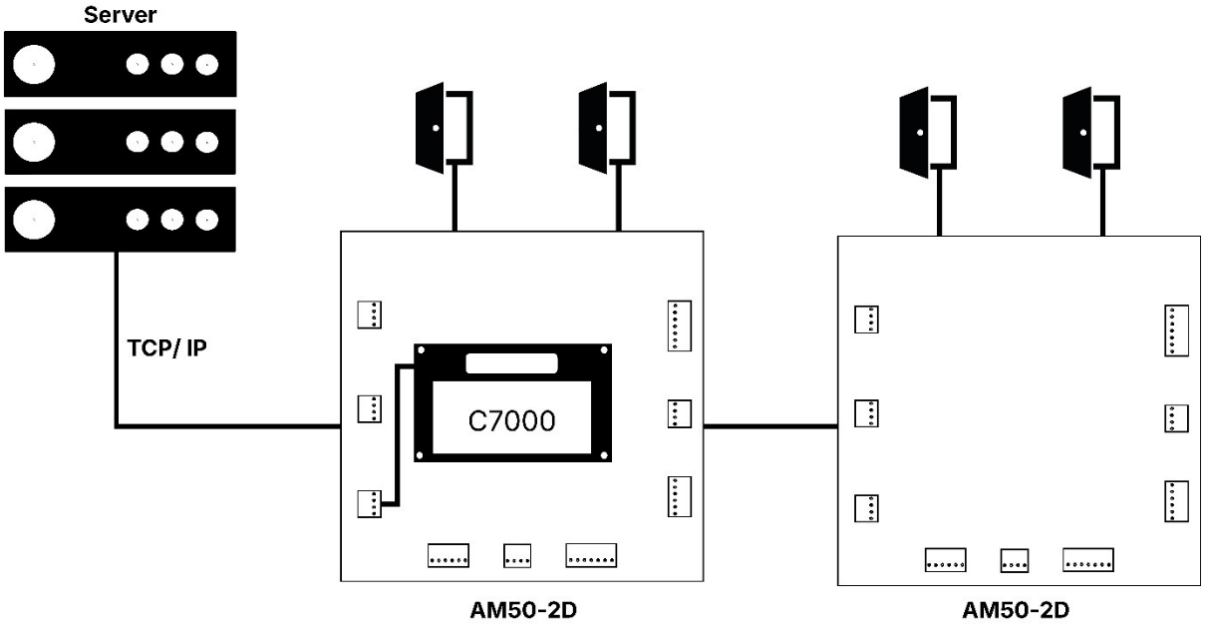

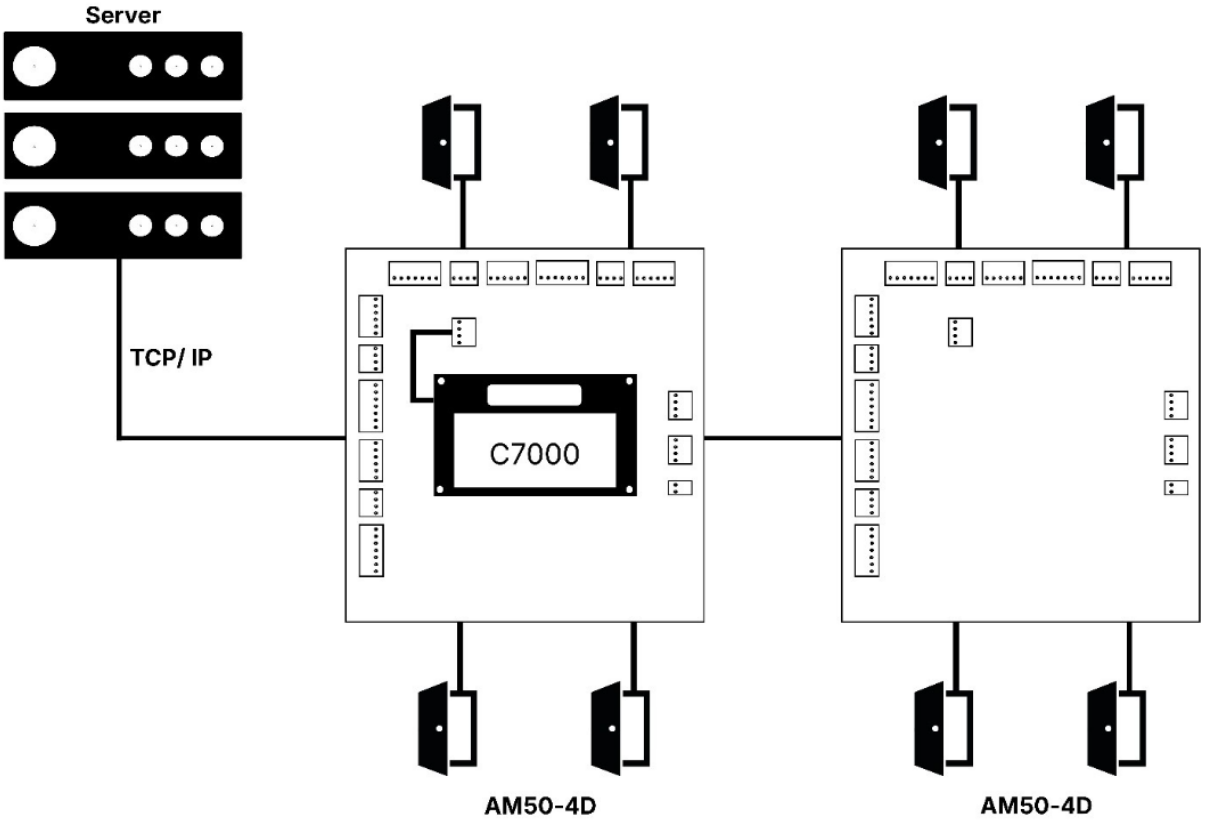

Copyright © Gallagher Group Limited

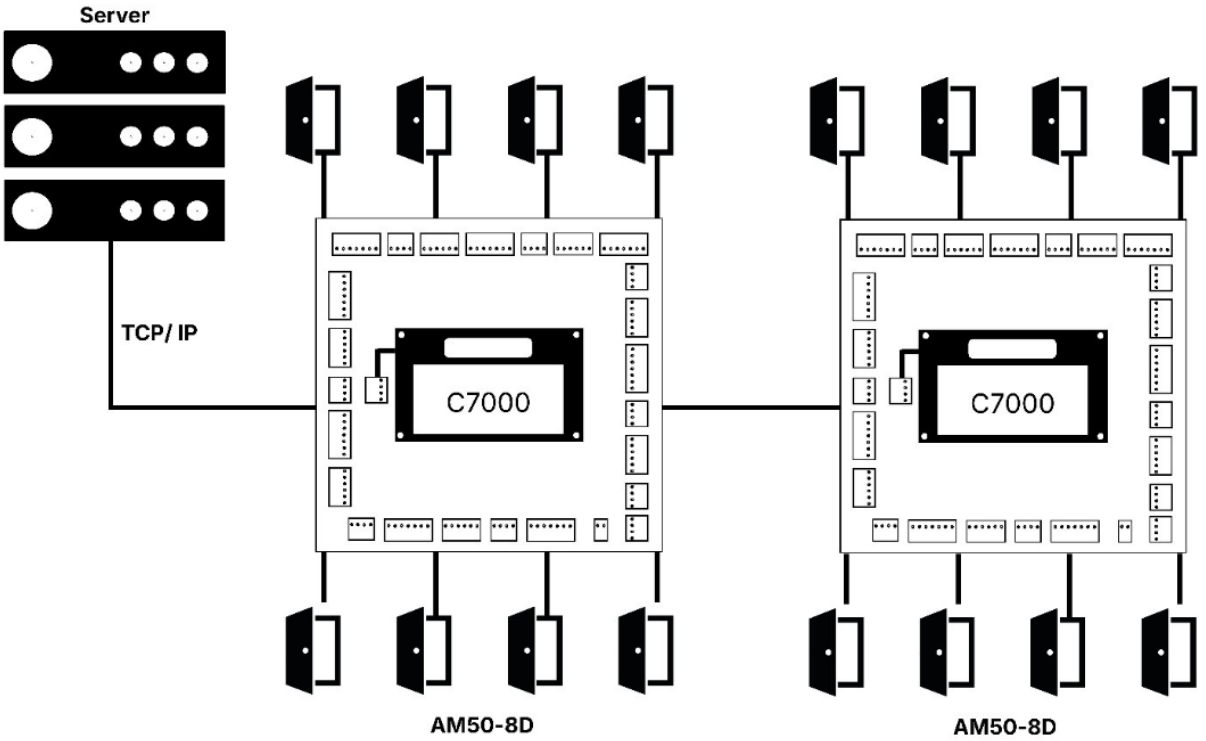

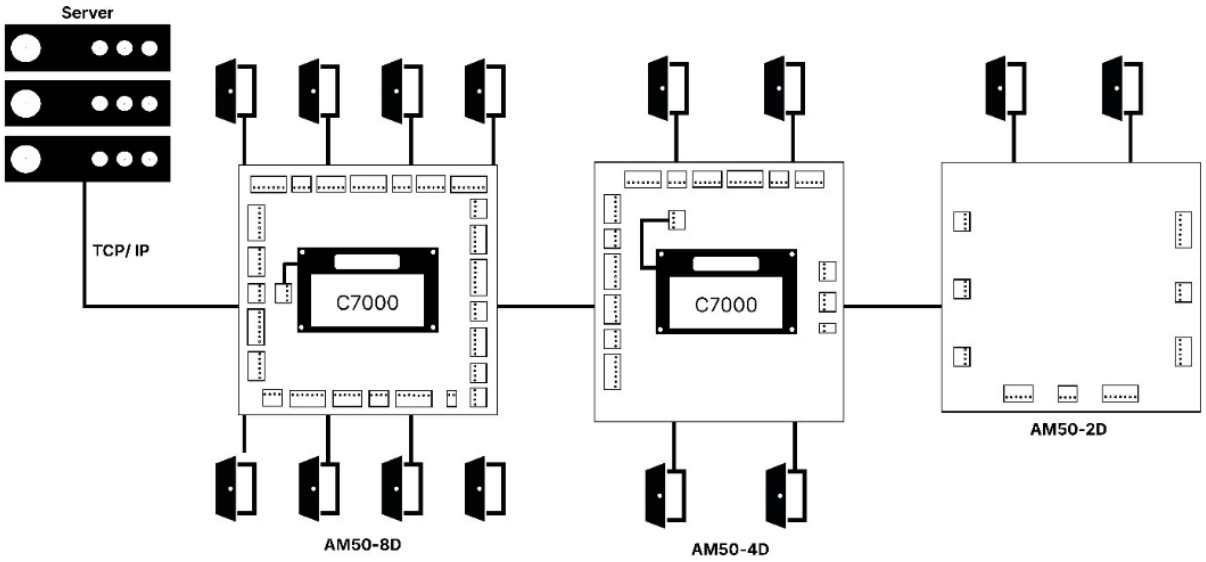

7 HBUS LED Diagnostic Indications

Diagnostic LED	Diagnostic indication
3 Flash (Red)	No communications with the Controller.
2 Flash (Red)	Communications with the Controller, but board is not configured.
1 Flash (Red)	Fully configured and functioning normally.

Copyright © Gallagher Group Limited

8 Technical specifications

Product			
Part Number	C300722	C300724	C300726
Description	QuickSwitch AM50-2D	QuickSwitch AM50-4D	QuickSwitch AM50-8D
Power Supply			
Operating voltage (Vin)	13.6 Vdc ± 15%		
Fuse	Onboard 2 A resettable polyfused		
Operating Current Relays OFF: Relays ON:	 35mA DC 200mA DC	 40mA DC 355mA DC	 45mA DC 680mA DC
Output Power (Vout, J4)	Direct VIN pass through		
Reader Port Output Power	500mA max per port / Around 0.5V less than Vin		
Environmental			
Temperature range	-10 °C to +70 °C (+14 °F to +158 °F)	-10 °C to +70 °C (+14 °F to +158 °F)	-10 °C to +70 °C (+14 °F to +158 °F)
Humidity	95% noncondensing*	95% noncondensing*	95% noncondensing*
Connections			
Inputs Format:	4 4 state monitoring (configured in Command Centre)	8 4 state monitoring (configured in Command Centre)	16 4 state monitoring (configured in Command Centre)
Tamper Inputs	1	1	1
Battery Fault Input	1	1	1
Power Fault Input	1	1	1
Outputs Relay Contact Rating:	4 24 Vdc/ac, 3A resistive, 1A inductive	8 24 Vdc/ac, 3A resistive, 1A inductive	16 24 Vdc/ac, 3A resistive, 1A inductive
RS485 Ports	3**	5***	9****
Shipping dimensions			
Height 290 mm (11.4 in) / Width 290 mm (11.4 in) / Depth 35 mm (1.3 in)			

* Gallagher modules are UL humidity tested and certified to 85% and have been independently verified to 95%.

** **Note for AM50-2D:** 3 dedicated ports but 4 RS485 connections provided.

- 2 x for reader ports
- 1 x for upstream to connect to Gallagher controller and 1 x to daisy chain other HBUS devices. The latter two connections share same RS485 transceiver on board.

*** **Note for AM50-4D:** 5 dedicated ports but 6 RS485 connections provided.

- 4 x for reader ports
- 1 x for upstream to connect to Gallagher controller and 1 x to daisy chain other HBUS devices. The latter two connections share same RS485 transceiver on board.

**** **Note for AM50-8D:** 9 dedicated ports but 10 RS485 connections provided.

- 8 x for reader ports
- 1 x for upstream to connect to Gallagher controller and 1 x to daisy chain other HBUS devices. The latter two connections share same RS485 transceiver on board.

Copyright © Gallagher Group Limited

9 Approvals and Compliance Standards



This symbol on the product or its packaging indicates that this product must not be disposed of with other waste. Instead, it is your responsibility to dispose of your waste equipment by handing it over to a designated collection point for the recycling of waste electrical and electronic equipment. The separate collection and recycling of your waste equipment at the time of disposal will help conserve natural resources and ensure that it is recycled in a manner that protects human health and the environment. For more information about where you can drop off your waste equipment for recycling, please contact your local city recycling office or the dealer from whom you purchased the product.

RoHS COMPLIANT

This product complies with the environmental regulations for the Restriction of Hazardous Substances in electrical and electronic equipment (RoHS). The RoHS directive prohibits the use of electronic equipment containing certain hazardous substances in the European Union.

UL installations

For a guide to configuring the Gallagher system to the UL Standard, please refer to the document appropriate to your location:
- *"3E2793 Gallagher Command Centre UL Configuration Requirements"* (for USA), or
- *"3E5960 Gallagher Command Centre ULC Configuration Requirements"* (for Canada).

Installers must ensure these instructions are followed to ensure the installed system is UL compliant.

UL CERTIFIED SAFETY SECURITY US CA BP8861

UL294 - Access Control
UL2610 - Commercial Burglary
CAN/ULC-S304- Commercial Burglary
CAN/ULC 60839-11-1- Access Control

FCC

This device complies with part 15 of the FCC Rules. Operation is subject to the following two conditions: (1) This device may not cause harmful interference, and (2) this device must accept any interference received, including interference that may cause undesired operation.

Note: Changes or modifications not expressly approved by Gallagher Limited could void the user's authority to operate this equipment.

Note: This equipment has been tested and found to comply with the limits for a Class B digital device, pursuant to part 15 of the FCC Rules. These limits are designed to provide reasonable protection against harmful interference in a residential installation. This equipment generates, uses and can radiate radio frequency energy and, if not installed and used in accordance with the instructions, may cause harmful interference to radio communications. However, there is no guarantee that interference will not occur in a particular installation. If this equipment does cause harmful interference to radio or television reception, which can be determined by turning the equipment off and on, the user is encouraged to try to correct the interference by one or more of the following measures:

- Reorient or relocate the receiving antenna.
- Increase the separation between the equipment and receiver.
- Connect the equipment into an outlet on a circuit different from that to which the receiver is connected.
- Consult the dealer or an experienced radio/TV technician for help.

UK CA CE

Copyright © Gallagher Group Limited

10 Mounting Dimensions

IMPORTANT: These pictures are not to scale, therefore use the measurements provided.

10.1 AM50-2D

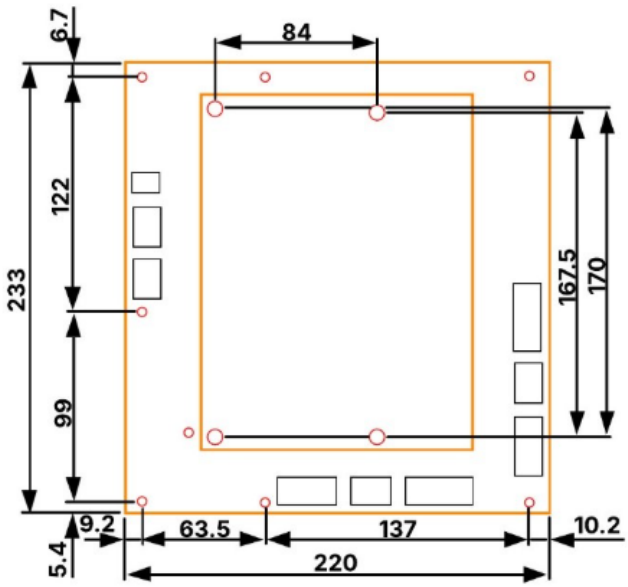

Front View
Scale 0.500

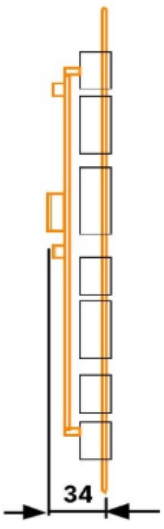

Side View

10.2 AM50-4D

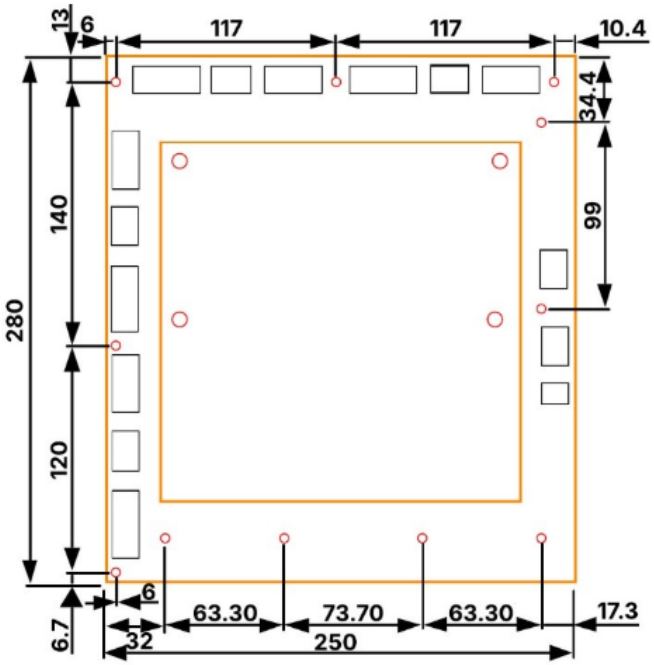

Front View
Scale 0.500

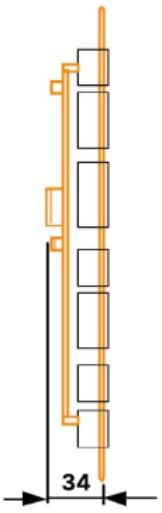

Side View

Copyright © Gallagher Group Limited

10.3 AM50-8D

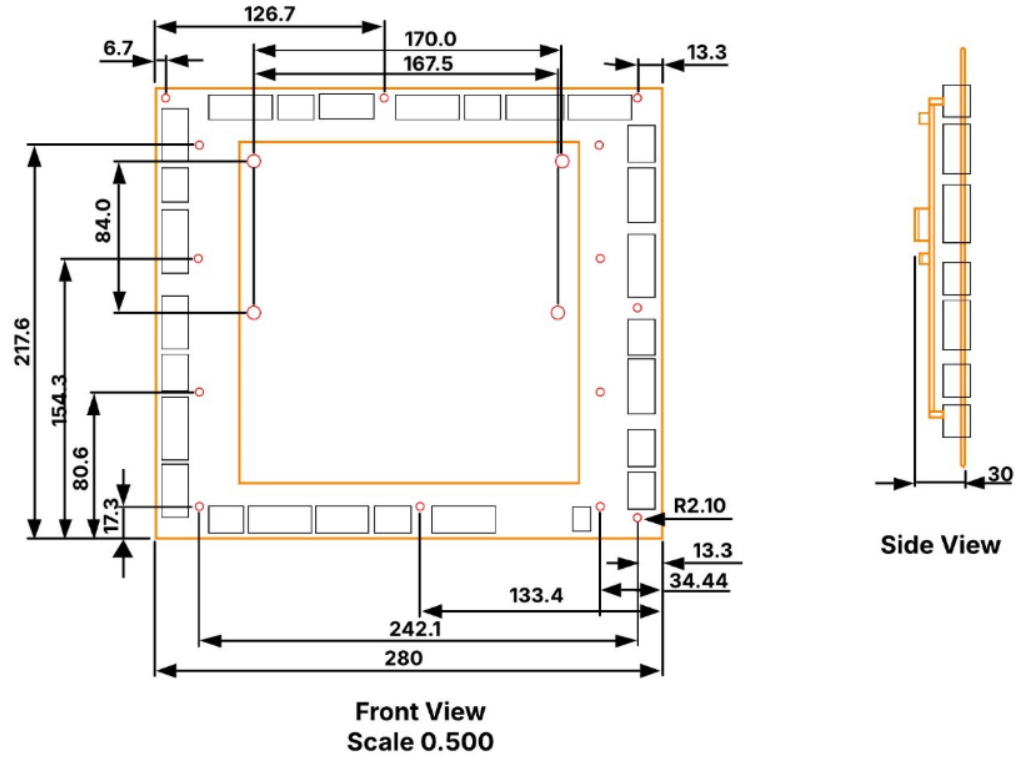

Copyright © Gallagher Group Limited