Gallagher

QuickSwitch LN

Installation Note

QuickSwitch LN- ACM: C300710
QuickSwitch LN- 8IN: C300714
QuickSwitch LN- 8OUT: C300713

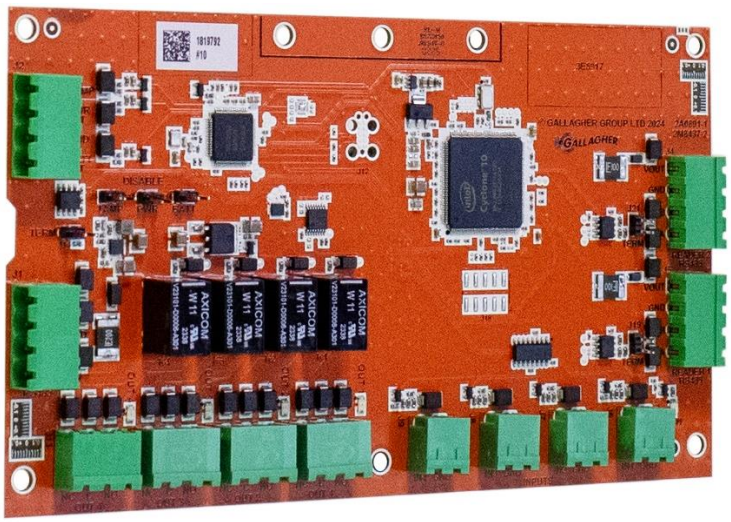

Copyright © Gallagher Group Limited

Disclaimer

This document gives certain information about products and/or services provided by Gallagher Group Limited or its related companies (referred to as "Gallagher Group").

The information is indicative only and is subject to change without notice meaning it may be out of date at any given time. Although every commercially reasonable effort has been taken to ensure the quality and accuracy of the information, Gallagher Group makes no representation as to its accuracy or completeness and it should not be relied on as such. To the extent permitted by law, all express or implied, or other representations or warranties in relation to the information are expressly excluded.

Neither Gallagher Group nor any of its directors, employees or other representatives shall be responsible for any loss that you may incur, either directly or indirectly, arising from any use or decisions based on the information provided.

Except where stated otherwise, the information is subject to copyright owned by Gallagher Group and you may not sell it without permission. Gallagher Group is the owner of all trademarks reproduced in this information. All trademarks which are not the property of Gallagher Group, are acknowledged.

Copyright © Gallagher Group Ltd 2025. All rights reserved.

Contents

1 Introduction 3

2 Before you begin 4
- 2.1 Shipment contents 4
- 2.2 Software 4
- 2.3 Power supply 4
- 2.4 Building Cabling 4
- 2.5 HBUS cabling topology 5
- 2.6 Termination 5
- 2.7 Device Limits 5
- 2.8 QuickSwitch Cabling Topology 5

3 Installation 6
- 3.1 Replacing existing blade boards 7

4 Connections 8
- 4.1 LN- ACM Connections 8
- 4.2 LN- 8IN Connections 9
- 4.3 LN- 8OUT Connections 9
- 4.4 Balanced Inputs 10
- 4.5 Output Relays 10
- 4.6 Tamper input 10
- 4.7 Power Fault Input 11
- 4.8 Battery Fault Input (LN- ACM only) 11

5 Hardware Architecture 11

6 HBUS LED Diagnostic Indications 12

7 Technical specifications 12

8 Approvals and Compliance Standards 13

9 Mounting Dimensions 14

1 Introduction

The Gallagher QuickSwitch LN boards provide a complete and cost-effective migration path to Gallagher. Each board replicates the layout and terminal locations of commonly used security hardware, allowing sites to upgrade to Gallagher more efficiently.

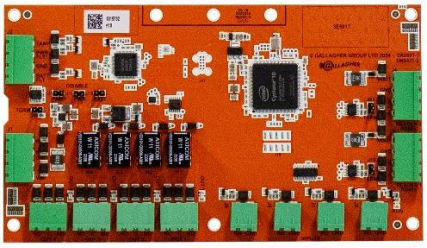

QuickSwitch LN- ACM

The QuickSwitch LN- ACM board is a nonintelligent door module capable of supporting 2x doors with the use of a Gallagher Controller. Additional HBUS devices can be daisy chained from the LN- ACM board to extend the system to support a maximum of x10 doors per controller.

The board provides connection for:

- 4 Inputs
- 4 Outputs
- 3 RS485 ports (2x for reader ports, 1x upstream to connect to Gallagher controller & daisy chain other HBUS devices)
- Dedicated tamper, battery fault, and power fault inputs

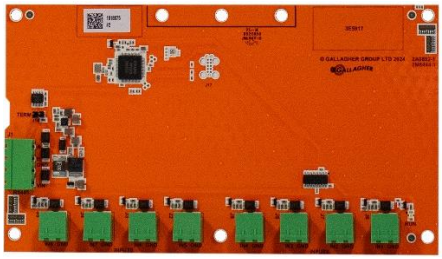

QuickSwitch LN- 8IN

The QuickSwitch LN- 8IN board provides inputs for door monitoring or other devices.

The board provides connection for:

- 8 Inputs
- 1 RS485 port (upstream to connect to Gallagher Controller)

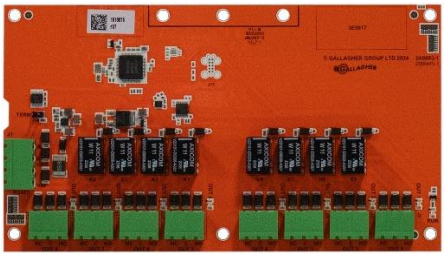

QuickSwitch LN- 8OUT

The QuickSwitch LN- 8OUT board provides outputs only.

The board provides connection for:

- 8 Outputs
- 1 RS485 port (upstream to connect to Gallagher Controller)

Copyright © Gallagher Group Limited

2 Before you begin

2.1 Shipment contents

Check the shipment contains the following items:

	LN- ACM	LN- 8IN	LN- 8OUT
QuickSwitch LN board	✓	✓	✓
QuickSwitch LN component identification decal	✓	✓	✓
4k7 ohm resistors	8	16	×

Note: A QuickSwitch LN Controller Mount Kit (C300719) is required to install the Gallagher Controller in the Cabinet and to interconnect all LN QuickSwitch boards. This kit is **not included** with the QuickSwitch board and **must be purchased separately**,

2.2 Software

This product is supported from Command Centre v9.20 onwards.

The QuickSwitch device software is factory-loaded prior to shipment. New device software for the QuickSwitch is automatically downloaded from the Gallagher Controller v9.20 onwards.

To view the version of device software, as last reported by the board itself, click the **Connections** tab of the QuickSwitch item in Command Centre.

Note: The QuickSwitch item will display as offline until the item is fully configured. Controllers need to be upgraded to the latest release of 9.20 controller code (use of old, unsupported controller code like 9.10 may result in restarts and unpredicted behaviour).

2.3 Power supply

The QuickSwitch board requires a 13.6 Vdc ± 15% power supply. This is connected through the terminals labelled Vin and GND. An onboard 2 A resettable polyfuse provides over current protection.

Note: It is recommended that lock power be supplied via a separate cable from the control electronics, to minimise the possibility of high current spikes resulting from lock switching causing other electronic equipment to malfunction.

For UL or ULC compliant installations please refer to 3E2793 Command Centre UL Configuration Requirements and 3E5960 Command Centre ULC Configuration Requirements for specific details regarding power supply requirements.

2.4 Building Cabling

The QuickSwitch board requires a minimum cable size of 4 core 24 AWG (0.2 mm2) stranded security cable. This cable allows the transmission of data (2 wires) and power (2 wires). When using a single cable to carry both power supply and data, both the power supply voltage drop and data requirements must be considered.

For UL or ULC compliant installations please refer to 3E2793 Command Centre UL Configuration Requirements and 3E5960 Command Centre ULC Configuration Requirements for specific details regarding power supply requirements.

Copyright © Gallagher Group Limited

2.5 HBUS cabling topology

The HBUS communications protocol is based on the RS485 standard and allows the module to communicate over a distance of up to 500 m (1640 ft).

The cabling between HBUS devices should be done in a "daisy chain" topology, (i.e. A "T" or "Star" topology should not be used between devices).

2.6 Termination

The start and end devices on an HBUS circuit should be terminated using 120 ohm resistance. If the QuickSwitch Board is the start or end device on an HBUS circuit, terminate the board by connecting the supplied on-board termination jumper to the board. The location of the termination jumper is shown in section *"4. Connections"* later in this note.

2.7 Device Limits

The QuickSwitch board supports 2 x HBUS readers per RS485 Reader Port.

2.8 QuickSwitch Cabling Topology

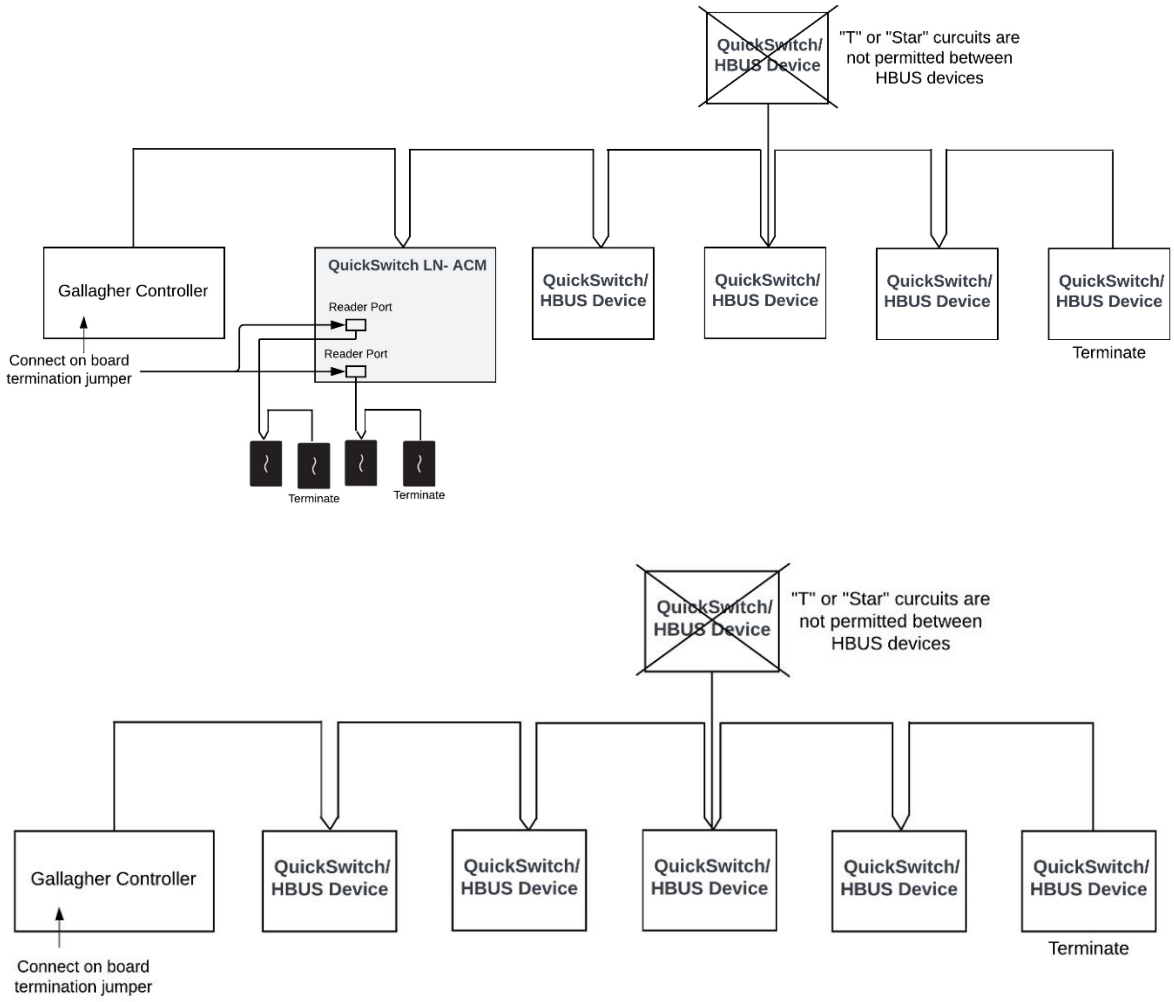

Copyright © Gallagher Group Limited

3 Installation

1. Disconnect and remove the ribbon cable connected to the blade-style boards in the cabinet.
2. Disconnect all terminal connectors from the existing controller, unscrew the metal column securing it, and keep the column nut for Step 4. Remove the existing controller from the cabinet.

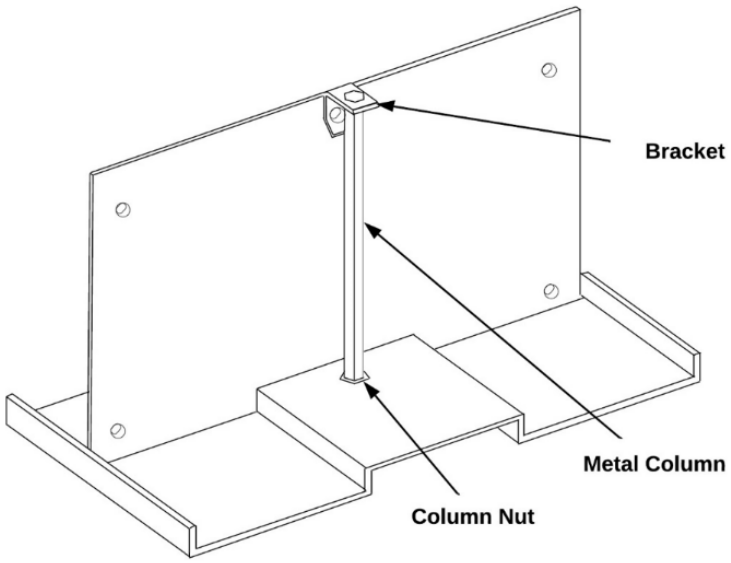

3. Install the Gallagher controller mounting plate from the QuickSwitch LN Controller Mount Kit (C300719) in the same position as the existing controller. Ensure the back of the mounting plate is nearest to the cabinet wall.

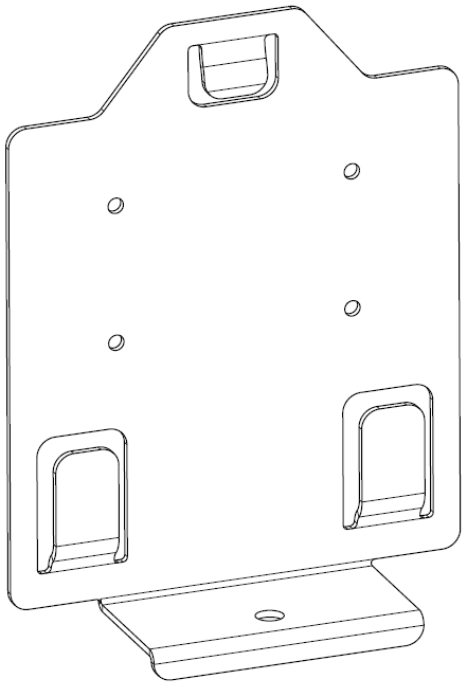

4. Secure the mounting plate with the column nut from Step 2.
5. Slide the Gallagher Controller onto the mounting plate until the top clip clicks into place.
   To remove it, release the clip and slide the Controller off.

Copyright © Gallagher Group Limited

3.1 Replacing existing blade boards

1. Remove all connectors from the first board, closest to the controller. Keep track of each terminal connector position.
2. Each existing board in the cabinet will be secured in place with a metal column, bracket, and nut.

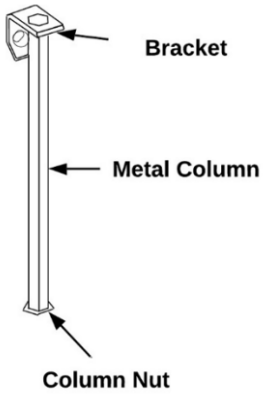

3. Remove the screw securing the existing board to the column.
4. Replace the existing board with the QuickSwitch board.
5. Reuse the screw to secure the QuickSwitch board into the column.
6. Place all input and output connector terminals from the existing board to the same position on the QuickSwitch board.
7. ***For LN-ACM boards only:***
   The QuickSwitch board only supports Gallagher HBUS readers. Therefore, the existing reader connector (7 PIN connector) is not supported on this QuickSwitch board. Wire Gallagher HBUS readers to the QuickSwitch board and ensure HBUS Topology is met.
8. Repeat Steps 1 to 6 for all existing boards.
9. Connect the interconnect wire set provided with the QuickSwitch LN Controller Mount Kit (C300719). Connect the wire set Green, and Brown to one of the controllers RS485 ports using the existing connector plug on the Controller.
10. Connect terminal 1 to the RS485 connector on the first QuickSwitch board.
11. Connect Interconnect Wireset to all remaining QuickSwitch boards. Note the Interconnect Wireset supports up to 7 QuickSwitch boards.

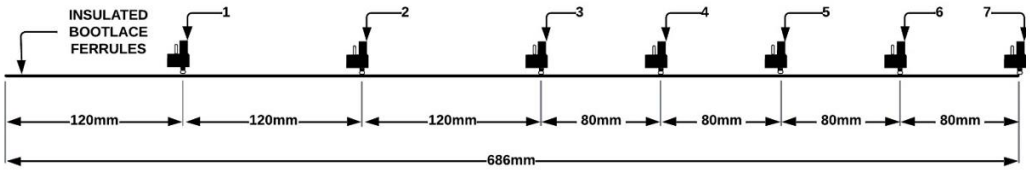

12. Connect the incoming power 13.6Vdc ± 15% from the existing power supply to the Controller VIN. Black wire to negative (-), and Red wire to positive (+).
13. Connect the Red and Black wire from Interconnect Wire set to the incoming power (VIN) on the Controller.
14. Fix the component identification decal inside the Cabinet door. This decal enables you to enter wiring and connection details and identifies the location and designation of cable connections, etc.
15. Configure the board in Command Centre as a 'QuickSwitch Board'. Refer to "Configuring an HBUS QuickSwitch Board" in the *Command Centre Configuration Client Online Help*.

Copyright © Gallagher Group Limited

4 Connections

4.1 LN- ACM Connections

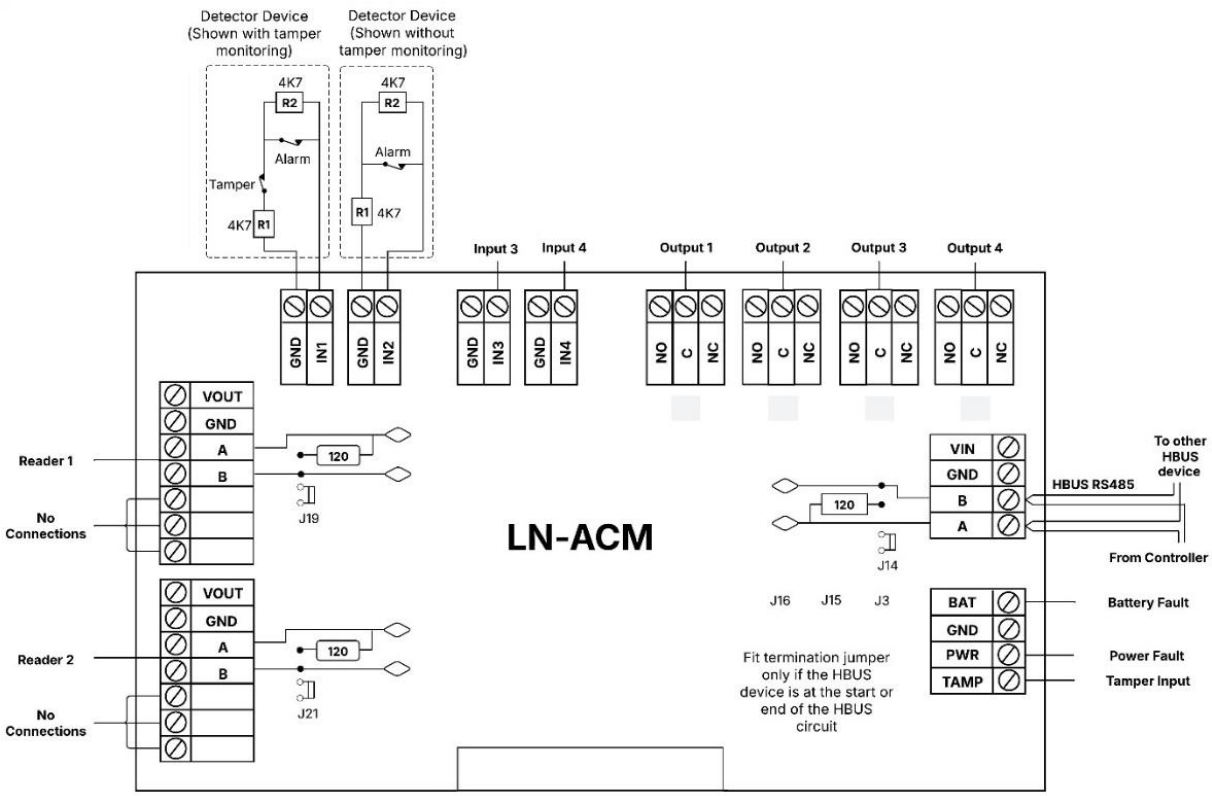

Copyright © Gallagher Group Limited

4.2 LN- 8IN Connections

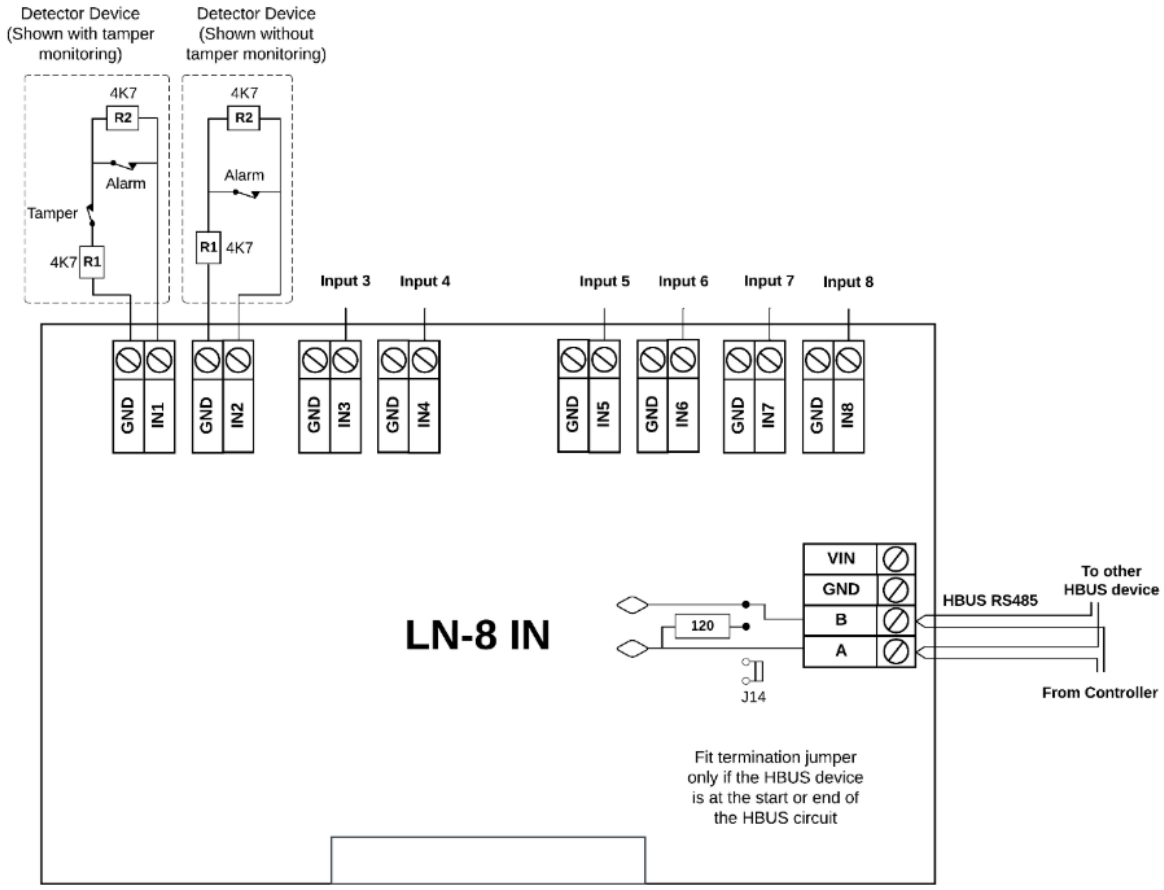

4.3 LN- 8OUT Connections

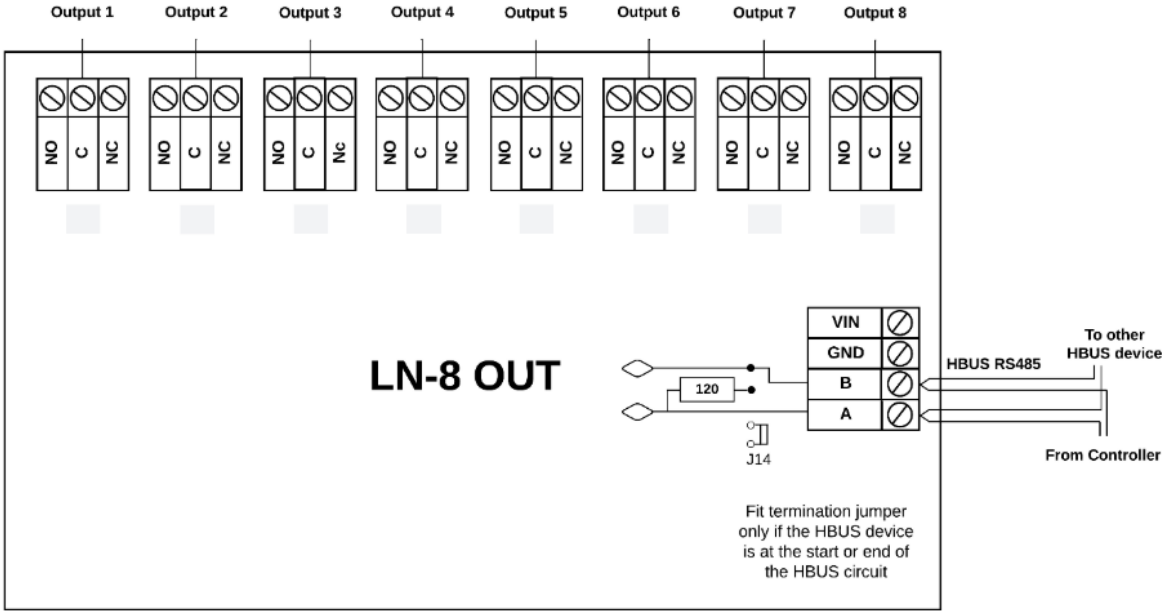

Copyright © Gallagher Group Limited

4.4 Balanced Inputs

Cabling should be a minimum size of 24 AWG (0.2 mm2) for all balanced inputs.

To ensure correct tamper detection (closed or open circuit), the balanced inputs require 4k7 ohm resistors to be connected as close as possible to the device being monitored.

When the monitored device incorporates a normally closed tamper switch, it can be wired in series with resistor R1.

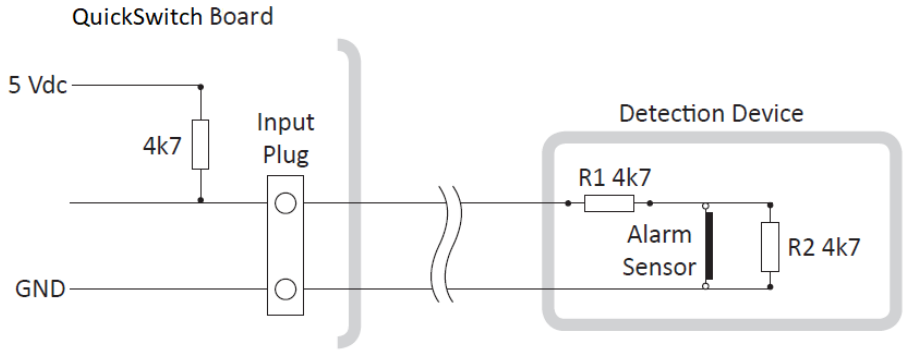

Resistor values can be configured for a QuickSwitch board in Command Centre (via the EOL Resistors property page). Refer to the topic "Configuring EOL Resistors for devices" in the *Command Centre Configuration Client Online Help*.

4.5 Output Relays

The cabling to and from the relay connectors must be capable of carrying sufficient current for the device the relay is controlling. Each relay circuit is rated:

- 3 A at 24 Vdc/ac for a resistive load
- 1 A at 24 Vdc/ac for an inductive load

Ensure back EMF snubbing components (a diode or Metal Oxide Varistor) are fitted to inductive loads to prevent voltage spikes from causing equipment to malfunction.

4.6 Tamper input (LN- ACM only)

Check section *"4. Connections"* for the location of the tamper input. The tamper input monitors "Open" or "Closed" contact. The normal state is Open- "Tampered" state. Connecting this input directly to GND will change it to Closed- "Not Tampered" state.

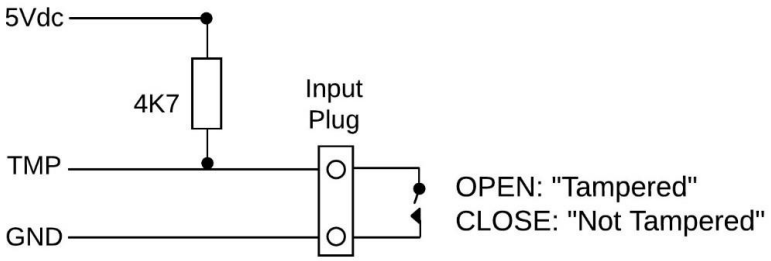

Note: To prevent incorrect (or continuous) tamper alarms being generated QuickSwitch that are not being used for tamper monitoring, a Command Centre operator will need to open the properties for the QuickSwitch item in Command Centre, click the Status and Overrides tab and check the disabled Tamper checkbox.

Copyright © Gallagher Group Limited

4.7 Power Fault Input (LN- ACM only)

Check section *"4. Connections"* for the location of the power fault input. The power fault input monitors "Open" or "Closed" contact. The input will move to the "alarm" state when the contact is open and will move to the "restored" state when closed.

4.8 Battery Fault Input (LN- ACM only)

Check section *"4. Connections"* for the location of the battery fault input. The battery fault input monitors "Open" or "Closed" contact. The input will move to the "alarm" state when the contact is open and will move to the "restored" state when closed.

Notes:

- Remove jumper J3 to enable the Tamper Input, or ensure J3 is fitted to disable it.
- Remove jumper J15 to enable the Power Fault Input, or ensure J15 is fitted to disable it.
- Remove jumper J16 to enable the Battery Fault Input, or ensure J16 is fitted to disable it.
- If multiple QuickSwitch LN- ACM boards are used in the same cabinet, only use the tamper, power fault, and battery fault inputs from one of the LN- ACM boards.

5 Hardware Architecture

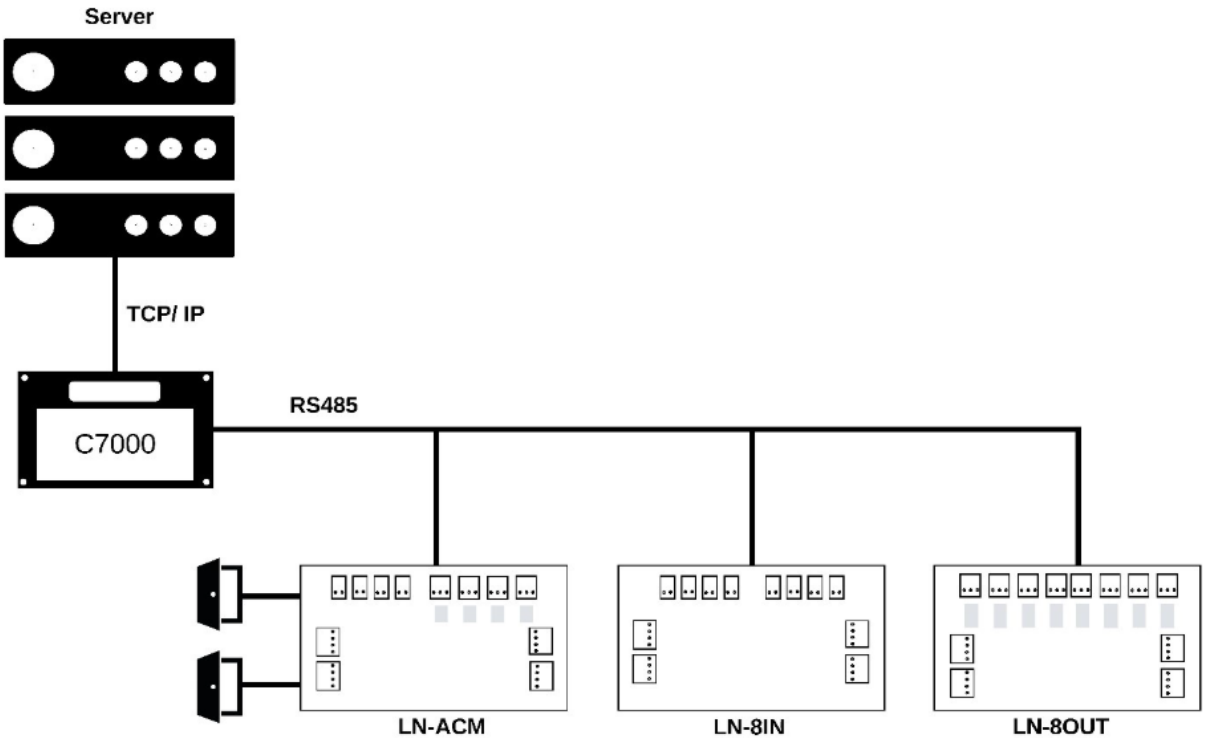

Copyright © Gallagher Group Limited

6 HBUS LED Diagnostic Indications

Diagnostic LED	Diagnostic indication
3 Flash (Red)	No communications with the Controller.
2 Flash (Red)	Communications with the Controller, but board is not configured.
1 Flash (Red)	Fully configured and functioning normally.

7 Technical specifications

Product			
Part Number	C300710	C300714	C300713
Description	QuickSwitch LN- ACM	QuickSwitch LN- 8IN	QuickSwitch LN- 8OUT
Power Supply			
Operating voltage (Vin)	13.6 Vdc ± 15%	13.6 Vdc ± 15%	13.6 Vdc ± 15%
Fuse	Onboard 2 A resettable polyfused	Onboard 2 A resettable polyfused	Onboard 2 A resettable polyfused
Operating Current Relays OFF: Relays ON:	 50mA DC 200mA DC	 40mA DC N/A	 40mA DC 115mA DC
Environmental			
Temperature range	-10 °C to +70 °C (+14 °F to +158 °F)	-10 °C to +70 °C (+14 °F to +158 °F)	-10 °C to +70 °C (+14 °F to +158 °F)
Humidity	95% noncondensing*	95% noncondensing*	95% noncondensing*
Connections			
Inputs Format:	4 4 state monitoring (configured in Command Centre)	8 4 state monitoring (configured in Command Centre)	0
Tamper Inputs	1	0	0
Battery Fault Input	1	0	0
Power Fault Input	1	0	0
Outputs Relay Contact Rating:	4 24 Vdc/ac, 3A resistive, 1A inductive	0	8 24 Vdc/ac, 3A resistive, 1A inductive
RS485 Ports	3	1	1
Shipping dimensions			
Height 292 mm (11.4 in) Width 247 mm (9.7 in) Depth 45 mm (1.7 in)			

* Gallagher modules are UL humidity tested and certified to 85% and have been independently verified to 95%.

Copyright © Gallagher Group Limited

8 Approvals and Compliance Standards



This symbol on the product or its packaging indicates that this product must not be disposed of with other waste. Instead, it is your responsibility to dispose of your waste equipment by handing it over to a designated collection point for the recycling of waste electrical and electronic equipment. The separate collection and recycling of your waste equipment at the time of disposal will help conserve natural resources and ensure that it is recycled in a manner that protects human health and the environment. For more information about where you can drop off your waste equipment for recycling, please contact your local city recycling office or the dealer from whom you purchased the product.

RoHS COMPLIANT

This product complies with the environmental regulations for the Restriction of Hazardous Substances in electrical and electronic equipment (RoHS). The RoHS directive prohibits the use of electronic equipment containing certain hazardous substances in the European Union.

FCC

This device complies with part 15 of the FCC Rules. Operation is subject to the following two conditions: (1) This device may not cause harmful interference, and (2) this device must accept any interference received, including interference that may cause undesired operation.

Note: Changes or modifications not expressly approved by Gallagher Limited could void the user's authority to operate this equipment.

Note: This equipment has been tested and found to comply with the limits for a Class B digital device, pursuant to part 15 of the FCC Rules. These limits are designed to provide reasonable protection against harmful interference in a residential installation. This equipment generates, uses and can radiate radio frequency energy and, if not installed and used in accordance with the instructions, may cause harmful interference to radio communications. However, there is no guarantee that interference will not occur in a particular installation. If this equipment does cause harmful interference to radio or television reception, which can be determined by turning the equipment off and on, the user is encouraged to try to correct the interference by one or more of the following measures:

- Reorient or relocate the receiving antenna.
- Increase the separation between the equipment and receiver.
- Connect the equipment into an outlet on a circuit different from that to which the receiver is connected.
- Consult the dealer or an experienced radio/TV technician for help.

UL Installations

Please refer to the document *"3E2793 Gallagher Command Centre UL Configuration Requirements"* for a guide to configuring the Gallagher system to the appropriate UL Standard. Installers must ensure these instructions are followed to ensure the installed system is UL compliant.
AS/NZS IEC 60839.11.1:2019 Grade 4, Class II
EN50130-4
EN55032

UL CERTIFIED SAFETY SECURITY US CA BP8861

US - Equipment: com burg and acc module
CA - Equipment: com, burg module

UK CA CE

Copyright © Gallagher Group Limited

9 Mounting Dimensions

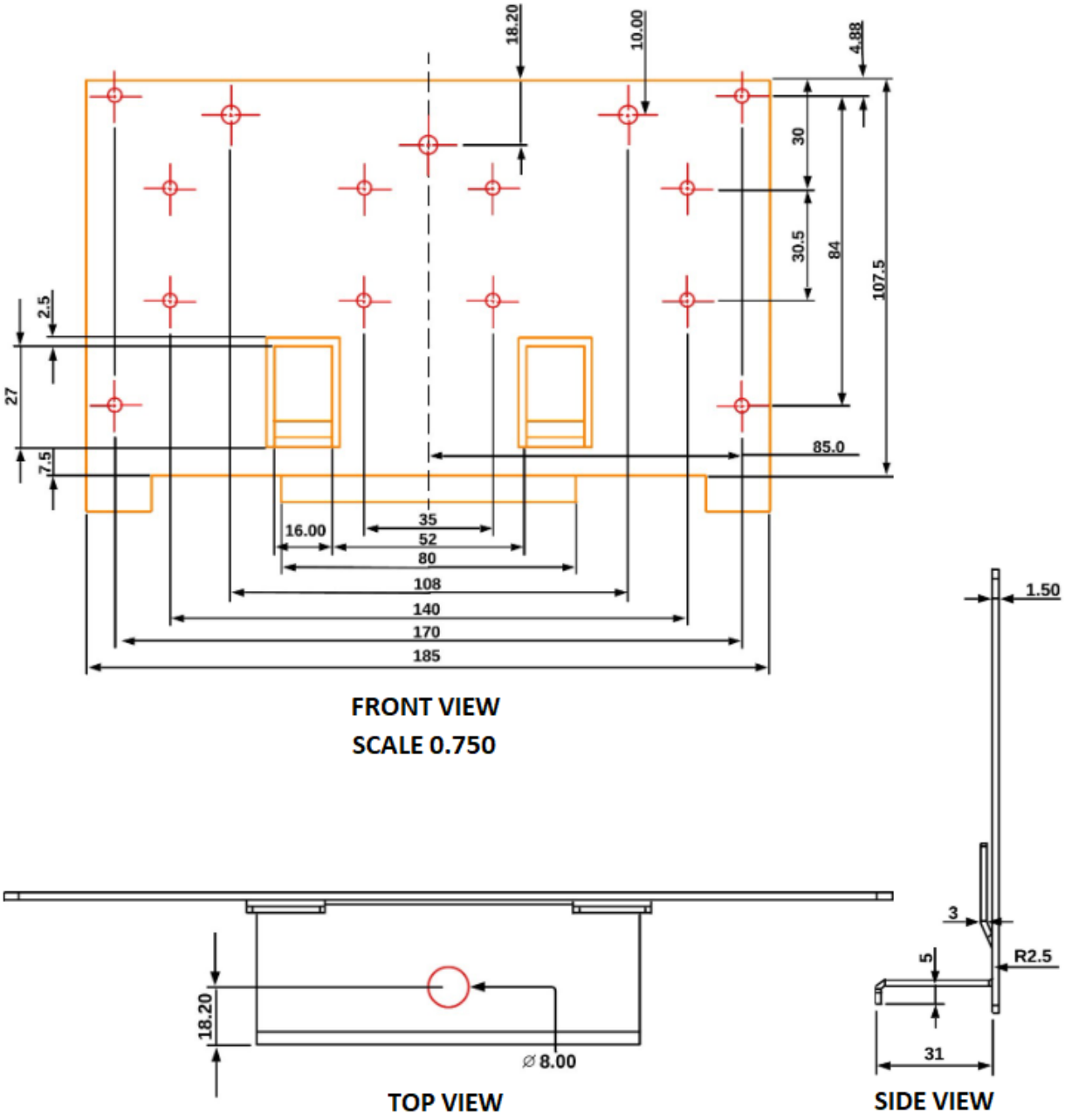

IMPORTANT

This picture is not to scale, therefore use the measurements provided.

Copyright © Gallagher Group Limited