Gallagher

C308150 High Security Server Cabinet
C308157 High Security Cabinet & PSU

Installation Note - COMMERCIAL IN CONFIDENCE

Copyright © Gallagher Group Limited

Disclaimer

This document gives certain information about products and/or services provided by Gallagher Group Limited or its related companies (referred to as "Gallagher Group").

The information is indicative only and is subject to change without notice meaning it may be out of date at any given time. Although every commercially reasonable effort has been taken to ensure the quality and accuracy of the information, Gallagher Group makes no representation as to its accuracy or completeness and it should not be relied on as such. To the extent permitted by law, all express or implied, or other representations or warranties in relation to the information are expressly excluded.

Neither Gallagher Group nor any of its directors, employees or other representatives shall be responsible for any loss that you may incur, either directly or indirectly, arising from any use or decisions based on the information provided.

Except where stated otherwise, the information is subject to copyright owned by Gallagher Group and you may not sell it without permission. Gallagher Group is the owner of all trademarks reproduced in this information. All trademarks which are not the property of Gallagher Group, are acknowledged.

Copyright © Gallagher Group Ltd 2024. All rights reserved.

Contents

1 Background 4

2 Contents of C308150 High Security Server Cabinet 4
- 2.1 Components 4
- 2.2 Mounting accessories 4
- 2.3 Not provided 4

3 Contents of C308157 High Security Cabinet & PSU 5
- 3.1 Components 5
- 3.2 Mounting accessories 5
- 3.3 Not provided 5

4 Installation 5
- 4.1 Power supply 5
- 4.2 Vibration sensor 6
- 4.3 Pin Plunger Tampers 6
- 4.4 Use of footprints 7
- 4.5 Fire Relay and Fuse Board (C300993) mounting and use (not supplied) 7
- 4.6 Server (C308150 only) 7
- 4.7 Keyboard (C308150 only) 8
- 4.8 Cabling between the cabinet door and cabinet body (C308150 only) 9
- 4.9 DC Converter installation (C308150 only) 9
- 4.10 Installation environment 10
- 4.11 Current draw of C308150 specific components 10
- 4.12 Outer Dimensions 10
- 4.13 Lock Bracket Dimensions 11

Appendix A: Calculating standby power requirements 12

Copyright © Gallagher Group Limited

1 Background

This document contains information to assist the installer in making best use of Gallagher High Security Cabinets. The installer is responsible for ensuring that any appropriate electrical or wiring standards are adhered to, including correct termination and suitable cable management techniques. Feedback or improvement suggestions are welcome, and these can be directed to your Gallagher representative. This document is provided to you in confidence and **must not be redistributed without permission**.

2 Contents of C308150 High Security Server Cabinet

The Gallagher High Security Server Cabinet (C308150) includes the following hardware components:

2.1 Components

1 x Server Cabinet and Monitor Assembly
1 x Server
1 x USB Keyboard
1 x C305101 Controller 6000 High Spec - PIV
1 x C300182 8H Module
1 x C200440 Power Supply, 8A (with Monitoring Board)
1 x 12V DC Converter
1 x 24V DC Converter
2 x Cabinet PIN plunger tampers
1 x Vibration tamper
Cabinet Door Earth and Battery Wire set

2.2 Mounting accessories

1 x Server mounting bracket
8 x Cable ties
6 x Aluminium CSK Rivets (4-2)
3 x P Clips
4 x M3 Nylock nuts
8 x M3 x 8 Pan Pozi Screws
2 x M3 x 8 Pan Torx Plastite Screws
8 x M3 x 6 Pan Pozi Screws
2 x M4 x 10 Pan POZI screws
6 x M4 Nylock Nuts

2.3 Not provided

Network cable
Bus Bar (for earth bonding)
DIN Power/earth terminals and end clamps
IEC Cord
C300993 Fire and Fuse Relay Boards

Copyright © Gallagher Group Limited

3 Contents of C308157 High Security Cabinet & PSU

The Gallagher High Security Cabinet & PSU (C308157) includes the following hardware components:

3.1 Components

1 x Cabinet
1 x C305101 Controller 6000 High Spec - PIV no USB
1 x C300182 8H Module
1 x C200440 Power Supply, 8A (with Monitoring Board)
2 x Cabinet PIN plunger tampers
1 x Vibration tamper
Cabinet Door Earth and Battery Wire set

3.2 Mounting accessories

1 x Server mounting bracket
6 x Aluminium CSK Rivets (4-2)
3 x P Clips
4 x M3 Nylock nuts
8 x M3 x 8 Pan Pozi Screws
2 x M3 x 8 Pan Torx Plastite Screws
8 x M3 x 6 Pan Pozi Screws
2 x M4 x 10 Pan POZI screws
6 x M4 Nylock Nuts

3.3 Not provided

Network cable
Bus Bar
DIN Power/earth terminals and end clamps
IEC Cord
C300993 Fire and Fuse Relay Boards

4 Installation

Important:
All unused access ports must be disabled or disconnected internally.

4.1 Power supply

Mount the C200440 Power Supply, 8A (with Monitoring Board) in the lower left-hand corner of the cabinet using one of the supplied M4 Nylock nuts. Remove the termination strip to terminate monitoring cabling. You will need to supply an IEC cord.



Copyright © Gallagher Group Limited

4.2 Vibration sensor

Use the 2 x M3 x 8 Pan Torx Plastite Screws to secure the base of the tamper to the cabinet at location A. Terminate the tamper PCB before refitting it to the tamper base. Secure the tamper cover with the supplied screw and cover it with the supplied cap.

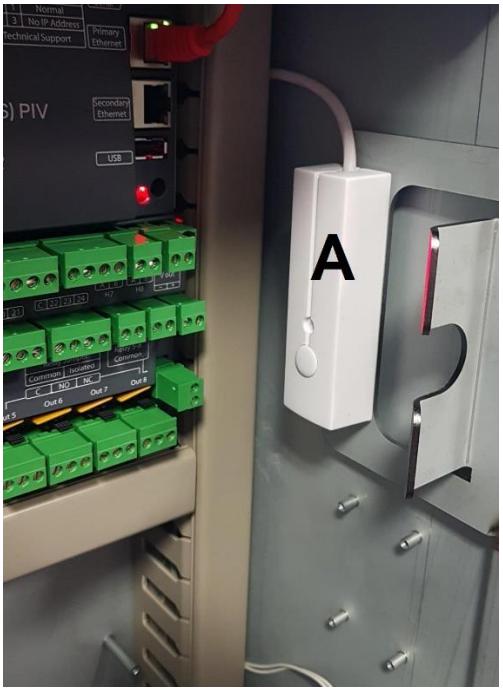

4.3 Pin Plunger Tampers

Install one Cabinet PIN plunger tamper to the front right edge of the cabinet in the location shown with the supplied rivets. Install the other Cabinet PIN plunger tamper upon the rear face of the cabinet using the supplied rivets in any one of the two locations provided immediately below the 50 mm Beta Duct. Mount the rear tamper by inserting it from the outside of the cabinet. **Remove the screws installed into the tamper pins to prevent excess pressure upon the tamper from breaking it**. Test the tampers.





Copyright © Gallagher Group Limited

4.4 Use of footprints

Install the supplied C6000 and 8H Module in the top footprint. The lower footprint can be used for system expansion or monitoring hardware.



4.5 Fire Relay and Fuse Board (C300993) mounting and use (not supplied)

Up to two Fire Relay and Fuse Boards (C300993) can be mounted upon the right-hand side of either the Primary or Auxiliary cabinets as illustrated using the 8 supplied M3 x 8 Pan Pozi Screws.

The relays upon the supplied Fire and Fuse Relay Boards can be used to turn the monitor on and off, based upon the status of the front tamper.

Fire and Fuse Relay Boards can also be used to control the power supply to network switches or to the server itself, allowing power to these to be severed upon the detection of a security violation. Power can then be reinstated via control of the on-board relay via the T20 actions menu.

4.6 Server (C308150 only)

Mount the server to the server mounting bracket using 4 of the supplied M3 x 6 Pan Pozi Screws. Mount the server and mounting bracket assembly to the rear of the cabinet with the supplied M4 Nylock nuts. Ensure that the power input is oriented towards the top of the cabinet, therefore allowing all cables to enter from above the server. **NOTE: The power to the server must be provided via the supplied DDR-30G 12V DC converter.**



Copyright © Gallagher Group Limited

4.7 Keyboard (C308150 only)

Place the keyboard in the tray at the bottom of the door and secure the cable at the rear of the tray with one of the cable ties provided. Run the USB cable as illustrated and secure the cable to the cabinet assembly using the supplied cable ties at the marked locations.



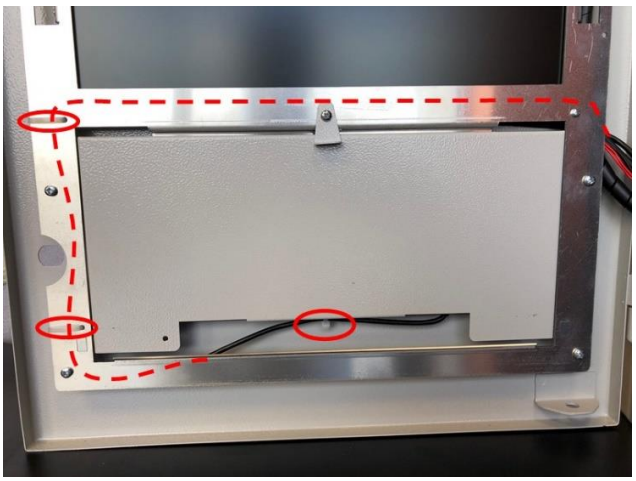

Wrap the keyboard cable away from the cabinet door with the existing monitor cabling. Ensure that the cable wrap covers all cables immediately adjacent to the edge of the aluminium assembly.



Copyright © Gallagher Group Limited

4.8 Cabling between the cabinet door and cabinet body (C308150 only)

Use one of the supplied P Clips to fasten the end of the cable wrapped section of monitor and keyboard cables to the cabinet using an M4 Nylock nut nut at the location illustrated. Ensure that the assembly does not foul upon the cabinet door or cabinet when the door is used, and that there is an adequate cable loop provided to reduce cable wear. Ensure that the cable assembly does not interfere with DIN mounted components and associated cabling when the door is used. **NOTE: The power to the monitor must be provided via the supplied DDR-30G 24V DC converter. Pair both red wires and connect to the positive terminal of the voltage converter. The remaining pair (either black or white) should be paired and connected to the negative terminal of the voltage converter.**



4.9 DC Converter installation (C308150 only)

Mount the supplied DC converters upon the DIN rail at the lower left of the cabinet, along with any additional DIN mounted power distribution and end clamps required (as pictured, but not supplied). Ensure that there is sufficient clearance between DIN mounted components and the monitor and keyboard cables.



Copyright © Gallagher Group Limited

4.10 Installation environment

Both the Gallagher High Security Server Cabinet (C308150) and High Security Cabinet & PSU (C308157) must be installed in an operating environment between -10 and 40 degrees Celsius for the power supply to remain within its operating temperature range at full load.

4.11 Current draw of C308150 specific components

The current draw of the monitor is less than 1 A
The current draw of the server is less than 1 A

4.12 Outer Dimensions

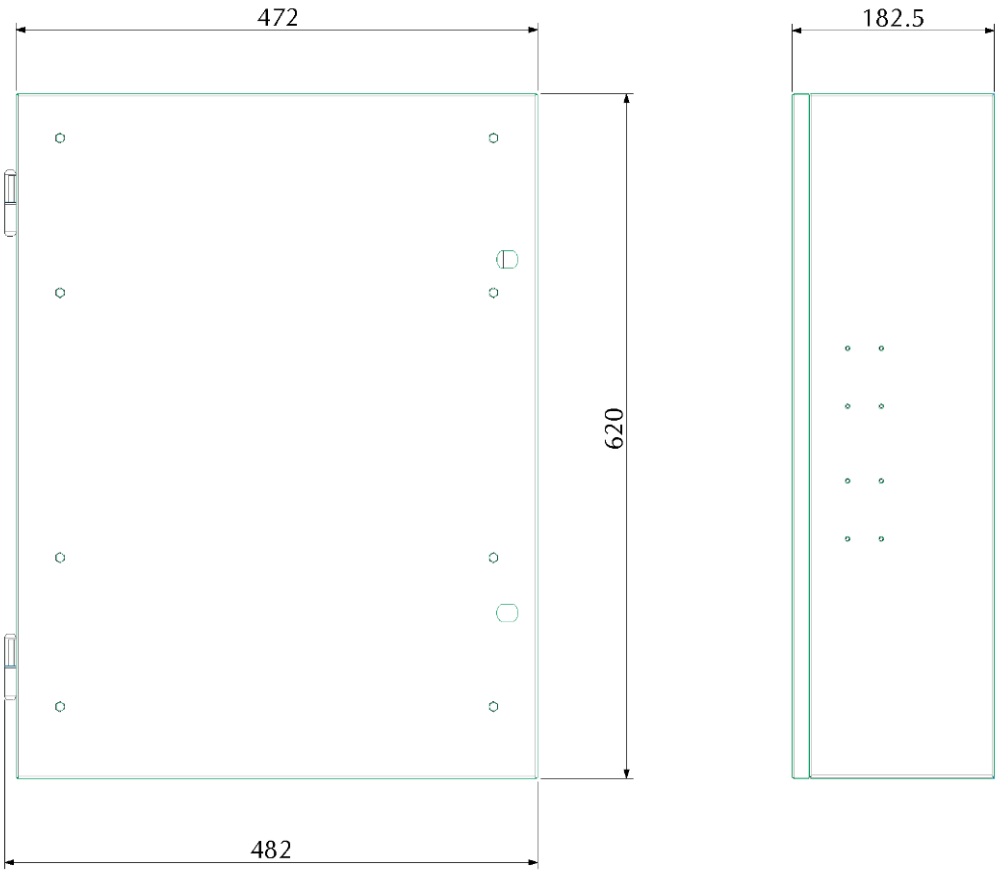

Copyright © Gallagher Group Limited

4.13 Lock Bracket Dimensions

Cabinet door from front

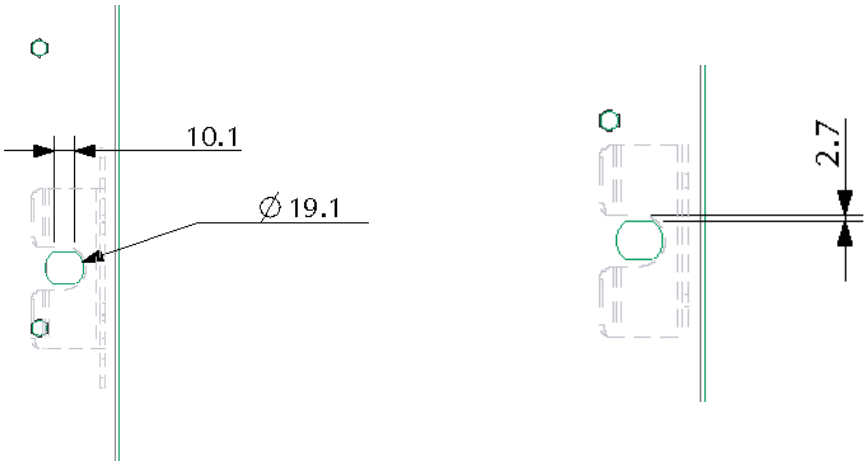

Lock latch from front

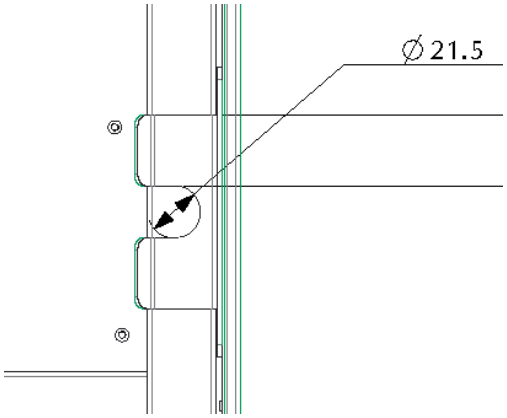

Lock latch from above

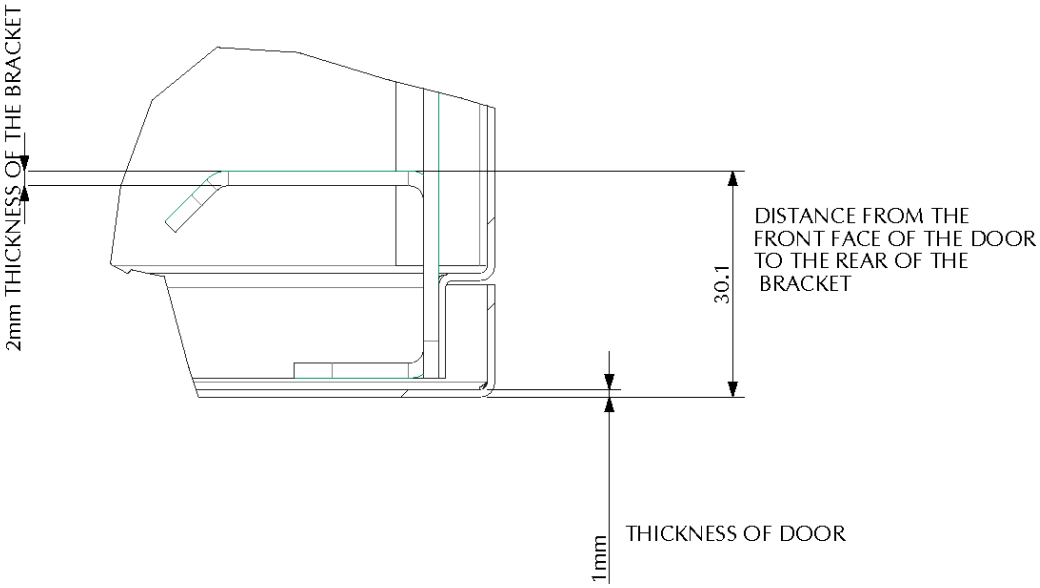

Copyright © Gallagher Group Limited

Appendix A: Calculating standby power requirements

The formulas below show the factors used when calculating standby power requirements and selecting a suitable battery.

To find the current draw for each component in order to calculate I_{equip} refer to the installation note for the component.

Example to determine the required capacity of a standby battery

$D_{cyc} = t_{act} \times N_{act} / 3600$

Where,

D_{cyc} (%) Duty cycle (percentage of time of actuations per hour [3600s]) per portal

t_{act} (sec) Duration of one actuation of a fail-secure type actuator (power applied to open)

N_{act} (/hr) Anticipated number of actuations per hour per portal (i.e., opening and closing of a portal)

$I_{fail\ safeTot} = I_{fail\ safe1} + I_{fail\ safe2} + I_{fail\ safe3} + I_{fail\ safe4}$

Where,

$I_{fail\ safe}$ (A) Power consumption of all fail-safe actuators (in activated state)

$I_{fail\ secure\ Tot} = I_{fail\ secure1} \times D_{cyc1} + I_{fail\ secure2} \times D_{cyc2} + I_{fail\ secure3} \times D_{cyc3} + I_{fail\ secure4} \times D_{cyc4}$

Where,

$I_{fail\ secure}$ (A) Power consumption of all fail-secure actuators (in activated state)

$I_{avg} = I_{equip} + I_{fail\ secure\ Tot} + I_{fail\ safeTot}$

Where,

I_{avg} (A) Average power consumption of the installed system under the expected load conditions

I_{equip} (A) Power consumption of AACS equipment (excluding actuators)

$C = t_{SB} \times I_{avg}$

Where,

C (Ah) Required minimum battery capacity

t_{SB} Hours Required standby time

Battery selection

The de-rating factor should be derived from the battery manufacturer's specifications account for battery type, the effects of aging and operating temperature.

Assume a 20 % de-rating factor

$C_{batt} = C \times 1,2$ (Ah)

The following is a worked example using the formulas above. It assumes a Controller operating two portals fitted with fail-secure type actuators. One portal has an anticipated throughput of 120 opening/closing cycles per hour, and other with 50.

In the event of a mains supply failure the Controller shall continue to function without mains power for a minimum of 12 hours.

Copyright © Gallagher Group Limited

Worked example using formulas

$D_{cycn} = t_{act} \times N_{act} / 3\,600$

Portal 1 $D_{cyc1} = 10s \times 120 / 3600 = 0.333$, Portal 2 $D_{cyc2} = 10s \times 50 / 3600 = 0.139$

$I_{\text{fail secure Tot}} = I_{\text{fail secure1}} \times D_{cyc1} + I_{\text{fail secure2}} \times D_{cyc2} + I_{\text{fail secure3}} \times D_{cyc3} + I_{\text{fail secure4}} \times D_{cyc4}$

$I_{\text{fail secure Tot}} = 0.6A_1 \times 0.333 + 0.6A_2 \times 0.139 = 0.283A$

$I_{avg} = I_{equip} + I_{\text{fail secure Tot}} + I_{\text{fail safeTot}}$

$I_{avg} = 0.2A + 0.283A + 0 = 0.48A$

$C = t_{SB} \times I_{avg}$

$C = 12hrs \times 0.48A = 5.80$

$C_{batt} = C \times 1{,}2$ (Ah)

$C_{batt} = 5.80 \times 1{,}2 = 6.96$ (Ah)

A standby battery of a capacity greater than 6.96 Ah is required to allow the Controller to continue to function for 12 hours. A standard value for this battery capacity might be 7 Ah.

Copyright © Gallagher Group Limited