Gallagher

Prox MIFARE Series (Teardrop)

Installation Note



Copyright © Gallagher Group Limited

Disclaimer

This document gives certain information about products and/or services provided by Gallagher Group Limited or its related companies (referred to as "Gallagher Group").

The information is indicative only and is subject to change without notice meaning it may be out of date at any given time. Although every commercially reasonable effort has been taken to ensure the quality and accuracy of the information, Gallagher Group makes no representation as to its accuracy or completeness and it should not be relied on as such. To the extent permitted by law, all express or implied, or other representations or warranties in relation to the information are expressly excluded.

Neither Gallagher Group nor any of its directors, employees or other representatives shall be responsible for any loss that you may incur, either directly or indirectly, arising from any use or decisions based on the information provided.

Except where stated otherwise, the information is subject to copyright owned by Gallagher Group and you may not sell it without permission. Gallagher Group is the owner of all trademarks reproduced in this information. All trademarks which are not the property of Gallagher Group, are acknowledged.

Copyright © Gallagher Group Ltd 2020. All rights reserved.

Contents

1 Before you begin 3
- 1.1 Shipment contents 3
- 1.2 Power Supply 3
- 1.3 Firmware 3
- 1.4 Cabling 3
- 1.5 Choosing a Cable 4

2 Distance between Proximity Readers 4

3 Installation 5

4 Connections 6
- 4.1 Connecting to a Gallagher Reader Module 8R or 4R (attached to Controller 6000) 7
- 4.2 Connecting to a Gallagher GBUS Universal Reader Interface 7

5 Technical Specifications 8

6 Approvals and Compliance Standards 8

7 Mounting Dimensions 9

1 Before you begin

1.1 Shipment contents

Check the shipment contains the following items:

- 1 x Gallagher Prox MIFARE Series (Teardrop) base
- 1 x Gallagher Prox MIFARE Series (Teardrop) facia
- 1 x Printed circuit board assembly
- 1 x Cable assembly
- 1 x M3 Torx Post machine screw
- 2 x Self tapper pozi counter sunk fixing screws

WARNING: You must use the screws provided, as using other types of screws could interfere with the electronics. See the "Installation" section later for further explanation.

1.2 Power Supply

Power for the Gallagher Prox MIFARE Series (Teardrop) reader is sourced from the device to which it is connected, (e.g. Gallagher Controller).

The supply at the reader should be 13.6 Vdc ± 15% (between 11.5 and 15.6 volts). It is recommended that the voltage should be between 12 and 15 volts to allow for local installation and environmental conditions, to ensure reliable operation.

The power source should be linear or a good quality switched-mode power supply. The performance of the reader may be affected by a low quality, noisy power supply.

1.3 Firmware

Version v MT3.07 (or later) of the Gallagher Prox MIFARE Series (Teardrop) reader firmware code supports the MIFARE Enhanced Security feature. This feature provides a method of ensuring that readers reading MIFARE cards are able to prevent access through the use of replicated cards, and is optional for customers, (i.e. customers can choose whether to use this enhanced security and which doors to apply it to).

The MIFARE Enhanced Security feature is only supported when the reader is connected to a Gallagher GBUS Universal Reader Interface (GBUS URI).

1.4 Cabling

The Gallagher Prox MIFARE Series (Teardrop) reader cable entry grommet is designed to accept 4 core, 0.2mm^2 (24 AWG) cable. This cable has an outside diameter of 5mm ($^1/_5$ inch). A short tail of this cable is supplied with connector fitted, with each reader. When using a single cable to carry both power supply and data from the source to the reader, both the power supply voltage drop and data requirements must be considered. The cable uses two wires for data and two wires for power supply.

Power: The conductor size should be sufficient to ensure that the voltage at the reader terminals is not less than 12 Vdc.

Data: The capacitance between any conductors or any conductors and the shield should not exceed a total of 24nF for the entire cable. A twisted pair is recommended for the data circuit.

It is recommended that the distance between the control unit and the reader should not exceed 200m (600ft).

Copyright © Gallagher Group Limited

1.5 Choosing a Cable

The table below details the maximum cable lengths for each type of cable when connecting a **single** Gallagher Prox MIFARE Series (Teardrop) reader to a Controller and power supply.

Cable type	Maximum distance *
CAT5 **	40m (130ft)
4 x 0.2mm^2 (4 x 24 AWG)	40m (130ft)
4 x 0.5mm^2 (4 x 20 AWG)	100m (330ft)
4 x 1mm^2 (4 x 18 AWG)	200m (660ft)

* These distances apply to unshielded cable. If shielded cable is used, the distances will be reduced due to the increased capacitance caused by the shielding.

** CAT5 is not recommended for security systems as this cable has solid copper conductors and is designed for use with RJ45 insulation displacement connectors.

2 Distance between Proximity Readers

The distance separating any two proximity readers must not be less than 200mm (8 inches) in all directions.

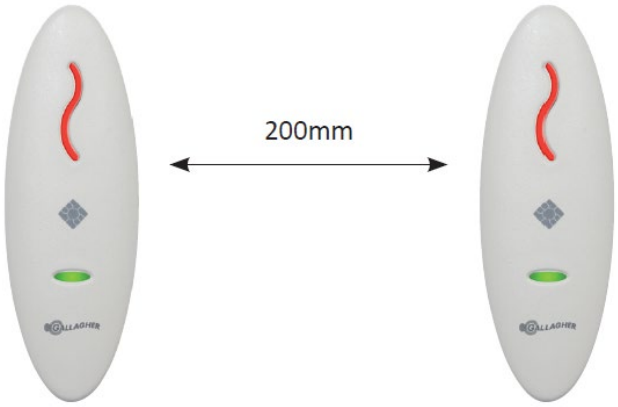

When mounting a proximity reader on an internal wall, check that any reader fixed to the other side of the wall is not less than 200mm (8 inches) away.

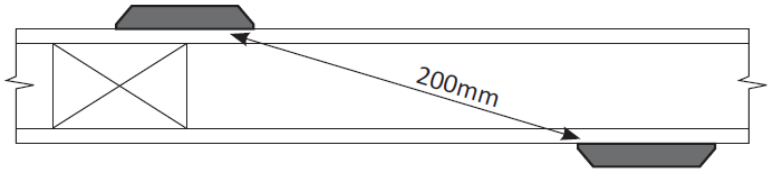

Copyright © Gallagher Group Limited

3 Installation

ATTENTION: This equipment contains components that can be damaged by electrostatic discharge. Ensure both you and the equipment are earthed before beginning any servicing.

The Gallagher Prox MIFARE Series (Teardrop) reader is designed to be mounted on any solid flat surface. However installation on metal surfaces, particularly those with a large surface area will reduce read range. The extent to which the range is reduced will depend upon the type of metal surface. To minimise this effect, plastic spacers which may be mounted between the reader and the metal surface are available (Part Number: C190980). Please contact your local Gallagher dealer for more information.

The recommended mounting height for the reader is 1.1m (3.6ft) from the floor level to the centre of the reader device. However this may vary in some countries and you should check local regulations for variations to this height.

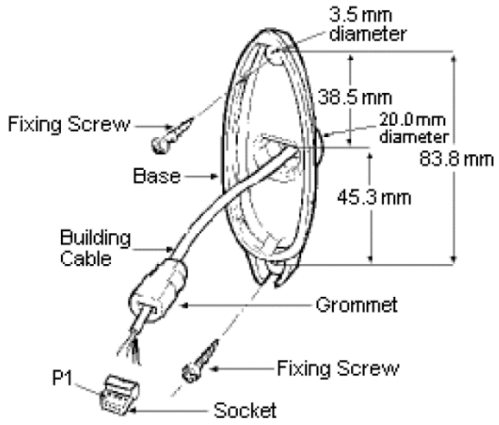

Note: The grommet through which the cables feed into the base of the reader helps to keep the unit waterproof.

1. Drill a 20mm (3/4 inch) diameter hole for the base extrusion through or into the mounting surface to a minimum depth of 40mm (1 1/2 inch).
2. Drill two pilot holes for the fixing screws.
3. Run the building cabling through the base and grommet.
4. Fit the base to the 20mm (3/4 inch) hole and secure it to the mounting surface using the four fixing screws provided.
   Note: The surface the reader is being attached to will determine which length screws are most appropriate from those provided.

   WARNING: You must use the screws provided, taking care not to overtighten them. Make sure that the heads of the counter sunk screws are flush with the top of the holes in the base, and ensure there is clearance for the screw that closes the base and facia together. Failure to do this, and/or using other types of screws could interfere with the electronics.

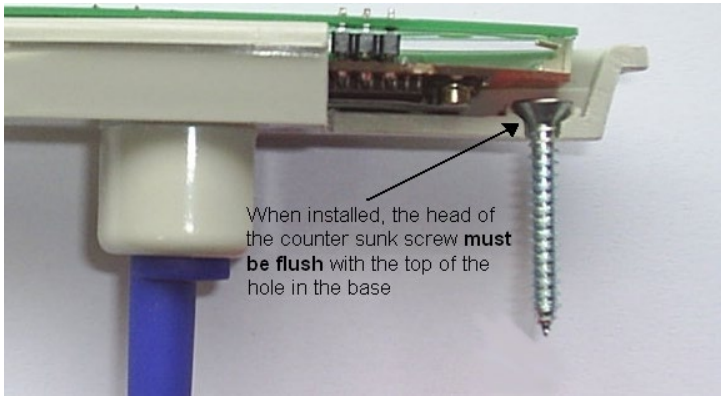

Copyright © Gallagher Group Limited

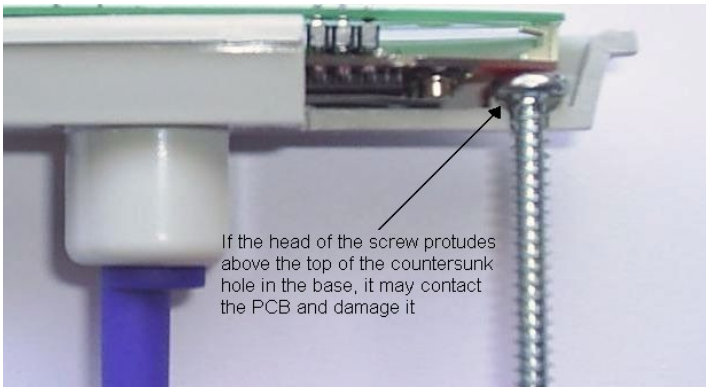

5. Push the socket back into the grommet.
6. Push the grommet and socket firmly back into the reader base so that the top of the grommet is slightly below the inside surface of the reader base.
7. Install the PCB assembly into the base.
8. Fit the the facia onto the base by clipping the small lip, inside the facia, over the top edge of the base and holding the top, press the bottom of the facia down over the base. If the cover does not fit easily, recheck the position of the grommet and/or the reader. Then insert the M3 x 16 Torx Security Screw (using an M3 Torx Post Security screwdriver) through the hole at the bottom of the facia and into the threaded metal insert in the base to secure the facia.
9. Removal of the facia is a simple reversal of these steps.

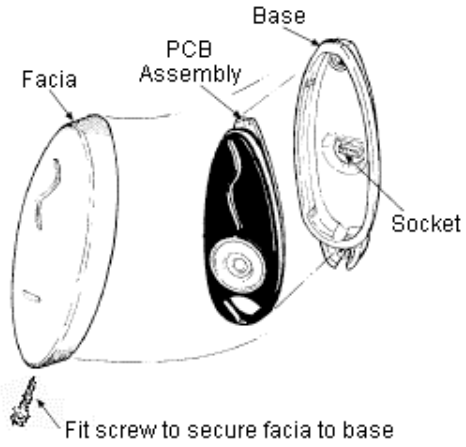

4 Connections

A Gallagher Prox MIFARE Series (Teardrop) reader can connect to the following devices using the "Cardax IV Reader" communications protocol:

- Gallagher Reader Module 8R or 4R (attached to the Controller 6000)
- Gallagher GBUS Universal Reader Interface (Gallagher GBUS URI)

Note: Use the cable terminating tool to connect the cables to the socket as described in the following sections. Pin number 4 of the reader connector feeds into the cable terminating tool first. The pin numbers are marked on the connector.

Copyright © Gallagher Group Limited

4.1 Connecting to a Gallagher Reader Module 8R or 4R (attached to Controller 6000)

Connect the wires to the sockets as shown:

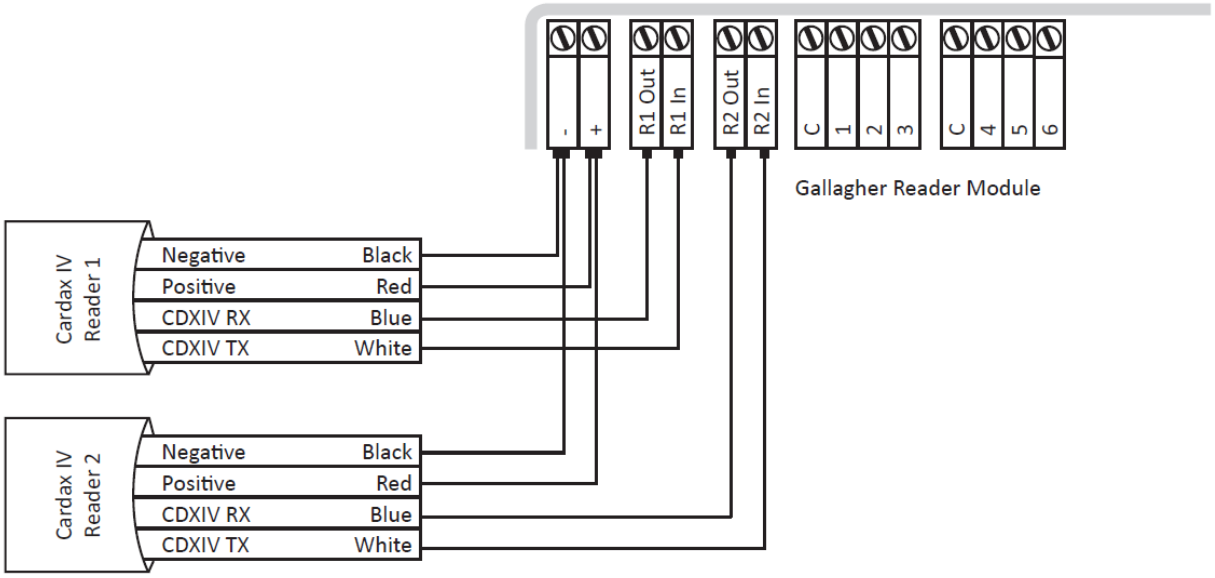

4.2 Connecting to a Gallagher GBUS Universal Reader Interface

Connect the wires to the sockets as shown in either of the following diagrams:

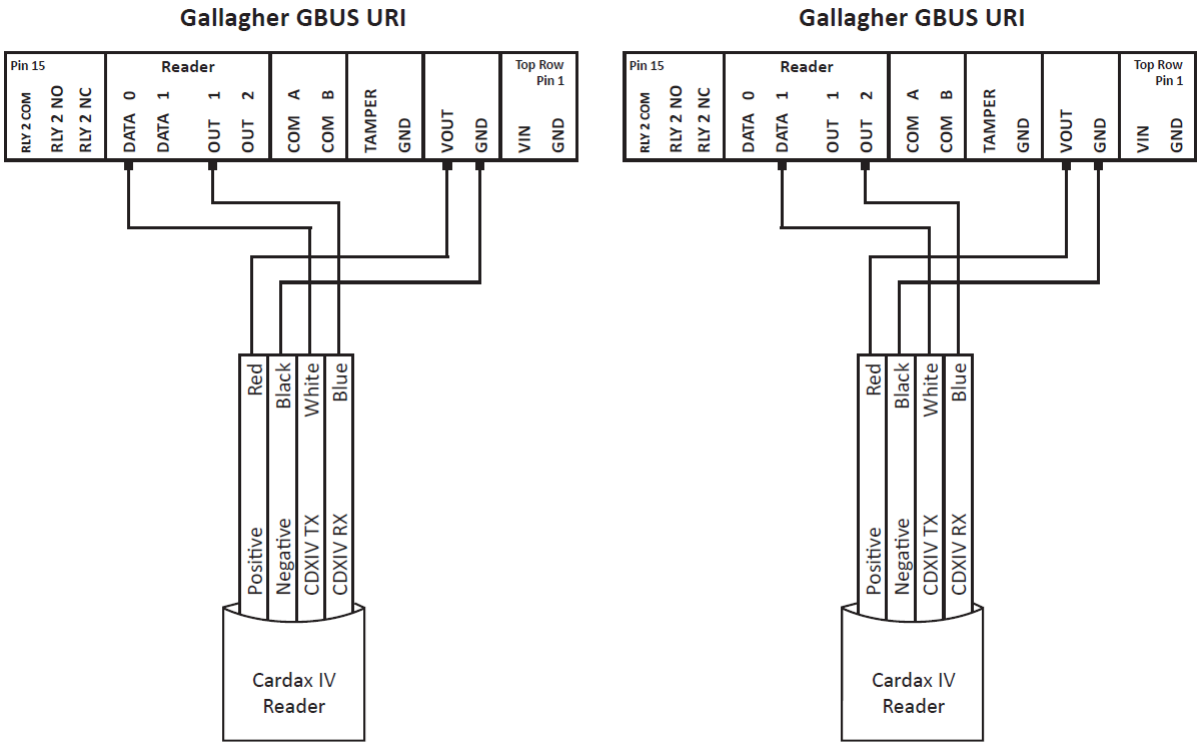

Copyright © Gallagher Group Limited

5 Technical Specifications

Routine maintenance:	Not applicable for this reader.
Cleaning:	This reader should only be cleaned with a clean, lint free, damp cloth.
Power required:	Voltage: 13.6 ± 15%
	Current: 125mA
Read range:	Up to 30mm (depending on card type and installation conditions)
Temperature range:	0°C to +55°C
Environmental protection:	IP54
Dimensions:	105mm x 35mm x 17mm ($4^1/_8$" x $1^3/_8$" x $^5/_8$" approx.)
Mounting:	Surface
Transmission frequency:	13.5MHz

6 Approvals and Compliance Standards

FCC

This device complies with part 15 of the FCC Rules. Operation is subject to the following two conditions: (1) This device may not cause harmful interference, and (2) this device must accept any interference received, including interference that may cause undesired operation.

Note: This equipment has been tested and found to comply with the limits for a Class B digital device, pursuant to part 15 of the FCC Rules. These limits are designed to provide reasonable protection against harmful interference in a residential installation. This equipment generates, uses and can radiate radio frequency energy and, if not installed and used in accordance with the instructions, may cause harmful interference to radio communications. However, there is no guarantee that interference will not occur in a particular installation. If this equipment does cause harmful interference to radio or television reception, which can be determined by turning the equipment off and on, the user is encouraged to try to correct the interference by one or more of the following measures:

- Reorient or relocate the receiving antenna.
- Increase the separation between the equipment and receiver.
- Connect the equipment into an outlet on a circuit different from that to which the receiver is connected.
- Consult the dealer or an experienced radio/TV technician for help.

Note: Changes or modifications not expressly approved by Gallagher Group Limited could void the user's authority to operate the equipment.

UL Installations

Please refer to the document "3*E2793 Gallagher Command Centre UL Configuration Requirements*" for a guide to configuring the Gallagher system to the appropriate UL Standard. Installers must ensure these instructions are followed to ensure the installed system is UL compliant.

SECURITY c UL us LISTED

c UL Type G

14RM

CE EN50130-4 EN55022

ACN: 002132943

Copyright © Gallagher Group Limited

7 Mounting Dimensions

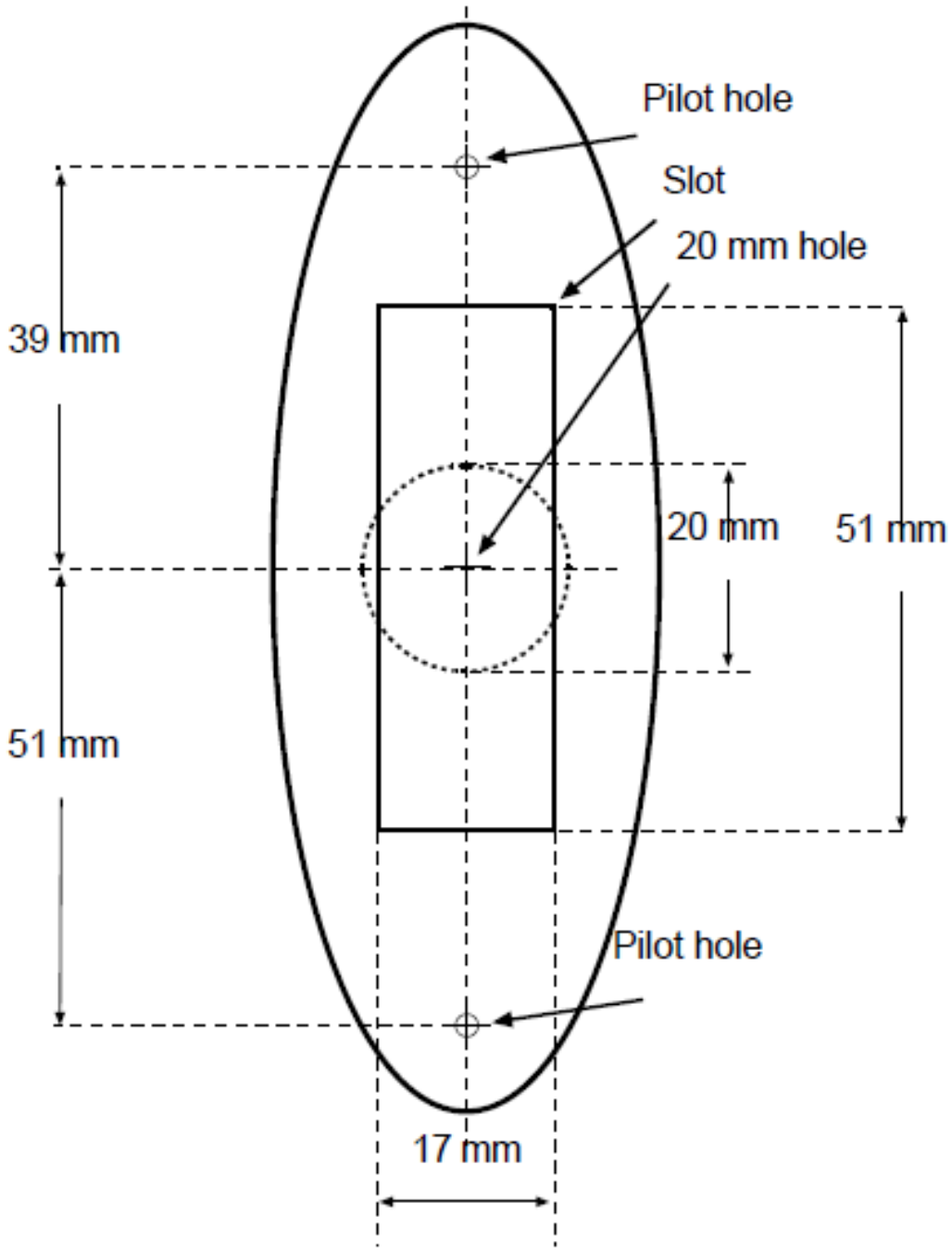

IMPORTANT

This picture is not to scale, therefore use the measurements provided.

Copyright © Gallagher Group Limited